STG HT6

TOWER COUNTER SERIES

cossiga

PRODUCT FEATURES

- Hinged rear door
- Solid glass front
- Single glazed
- Three adjustable shelves
- Ticket strips on shelves and deck
- Under shelf and canopy LED lights

CABINET DIMENSIONS & SPECIFICATIONS

Heated 75° factory set point

Model	Cabinet			Shelving no.	Display m2	Total food units	Operating Current	Connection	Voltage
	Length mm	Depth mm	Height mm			100 X 100 mm			50/60 Hertz
STGHT6	600	650	920	3 + base	0.80	55	5.4 Amp	10amp 3 pin plug	240V

* prior to installation see, installation guidelines, ventilation requirements and drainage options documents

ELECTRICAL POWER

Electrical power cord 2200mm
3 pin 10 amp 1 phase socket required

Double heating elements.

Maximum shelf load weight 15kg
spread evenly

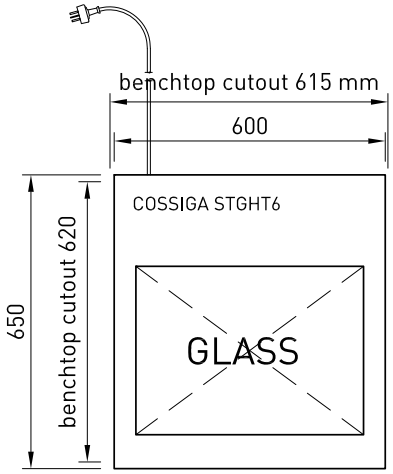

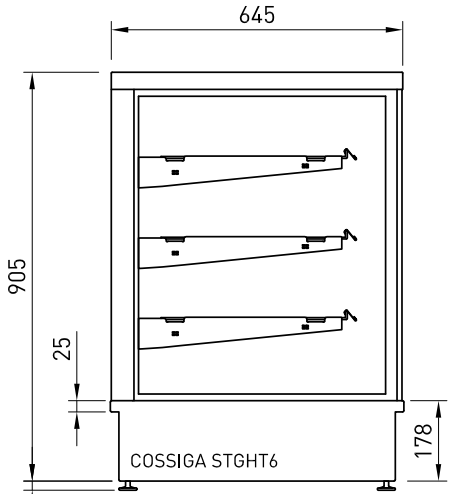

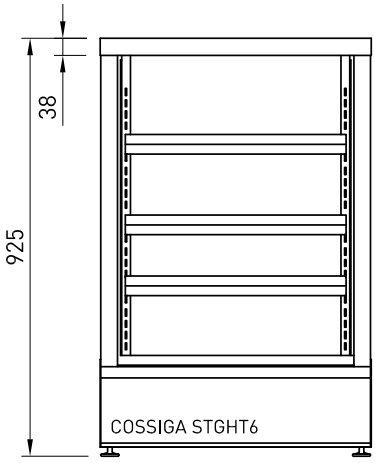

STG HT9

TOWER COUNTER SERIES

cossiga

PRODUCT FEATURES

- Sliding rear doors
- Solid glass front
- Single glazed
- Three adjustable shelves
- Ticket strips on shelves and deck
- Under shelf and canopy LED lights

CABINET DIMENSIONS & SPECIFICATIONS

Heated 75° factory set point

Model	Cabinet			Shelving no.	Display m2	Total food units	Operating Current	Connection	Voltage
	Length mm	Depth mm	Height mm			100 X 100 mm			50/60 Hertz
STGHT9	900	650	920	3 + base	1.27	84	7.4 Amp	10amp 3 pin plug	240V

* prior to installation see, installation guidelines, ventilation requirements and drainage options documents

ELECTRICAL POWER

Electrical power cord 2200mm
3 pin 10 amp 1 phase socket required

Double heating elements.

Maximum shelf load weight 15kg
spread evenly

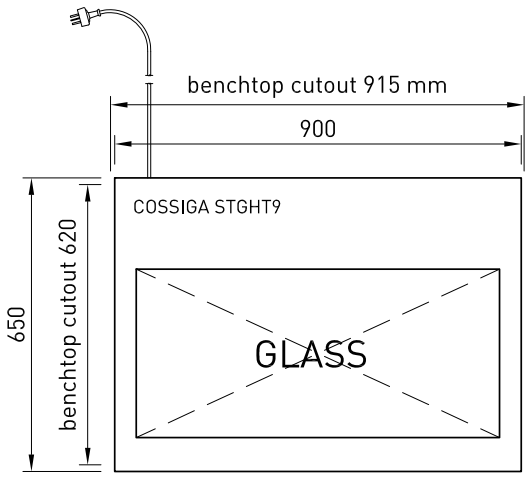

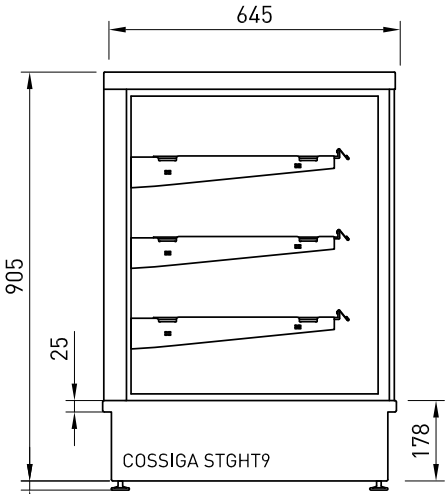

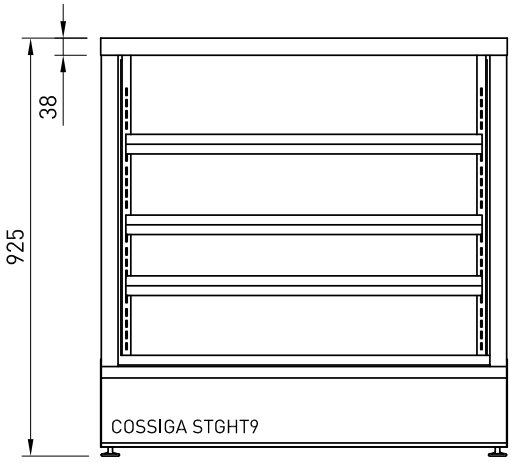

STG HT12 TOWER COUNTER SERIES

cossiga

PRODUCT FEATURES

- Sliding rear doors
- Solid glass front
- Single glazed
- Three adjustable shelves
- Ticket strips on shelves and deck
- Under shelf and canopy LED lights

CABINET DIMENSIONS & SPECIFICATIONS

Heated 75° factory set point

Model	Cabinet			Shelving no.	Display m2	Total food units	Operating Current	Connection	Voltage
	Length mm	Depth mm	Height mm			100 X 100 mm			50/60 Hertz
STGHT12	1200	650	920	3 + base	1.75	121	9.5 Amp	10amp lead only	240V

* prior to installation see, installation guidelines, ventilation requirements and drainage options documents

ELECTRICAL POWER

Electrical power cord 2200mm
3 pin 10 amp 1 phase socket required

Double heating elements.

Maximum shelf load weight 15kg
spread evenly

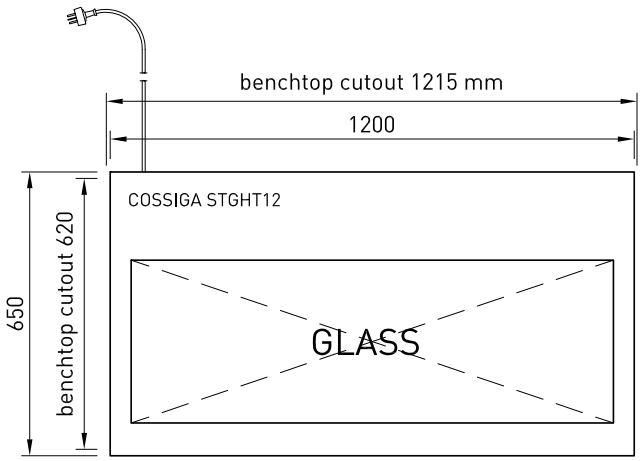

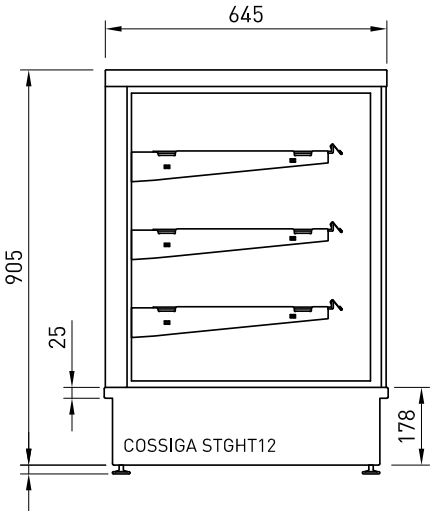

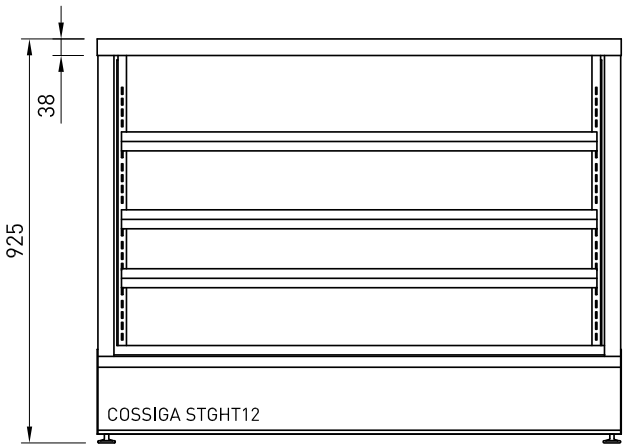

STG RF6 -SD

TOWER COUNTER SERIES

cossiga

PRODUCT FEATURES

- Heated double glazed glass top and sides
- Sliding doors front and hinged rear Double glazed
- Deck forced refrigeration
- Two adjustable shelves
- Ticket strips on shelves and deck
- Under shelf and canopy LED lights
- Integral condenser
- Self evaporating

CABINET DIMENSIONS & SPECIFICATIONS

Refrigerated 4° factory set point

Model	Cabinet			Shelving no.	Display m2	Total food units	Refrigerant	Operating Current	Connection	Voltage
	Length mm	Depth mm	Height mm			100 x 100 mm				50/60 Hertz
STGRF6 -SD	600	650	925	2 + base	0.61	55	134a	5.4 Amp	10amp 3 pin plug	240V

* prior to installation see, installation guidelines, ventilation requirements and drainage options documents

ELECTRICAL POWER

Electrical power cord 2200mm
3 pin 10 amp 1 phase socket required.
Maximum ambient operating temperature climate class N max 32°C

Double heating elements

Maximum shelf load weight 15kg spread evenly

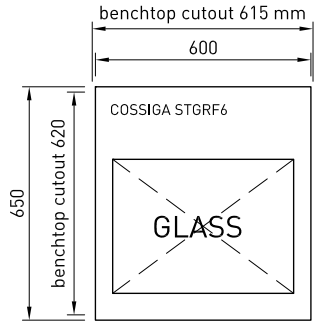

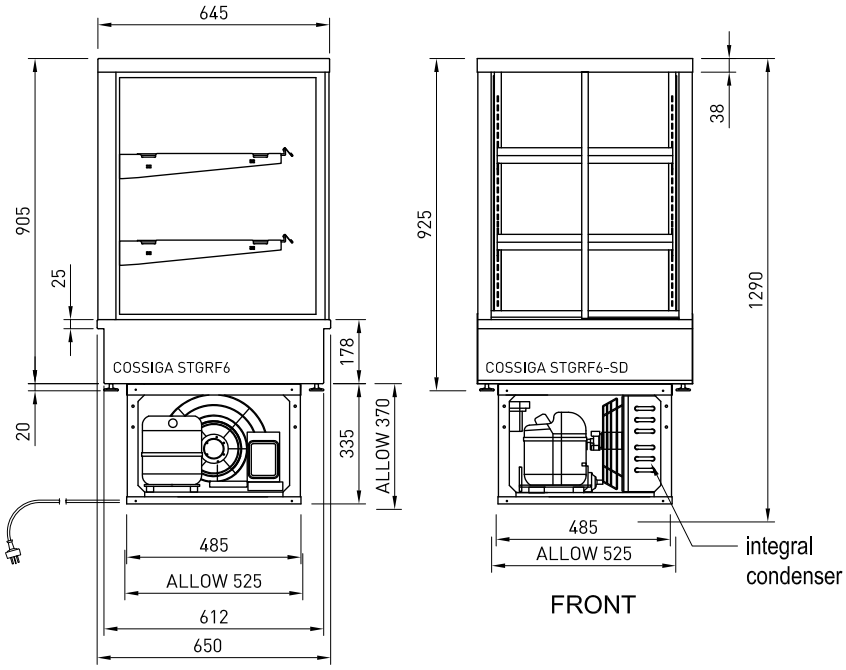

STG RF9-SD

TOWER COUNTER SERIES

cossiga

PRODUCT FEATURES

- Heated double glazed glass top and sides
- Sliding doors front and rear Double glazed
- Deck forced refrigeration
- Two adjustable shelves
- Ticket strips on shelves and deck
- Under shelf and canopy LED lights
- Integral condenser
- Self evaporating

CABINET DIMENSIONS & SPECIFICATIONS

Refrigerated 4° factory set point

Model	Cabinet			Shelving no.	Display m2	Total food units	Refrigerant	Operating Current	Connection	Voltage
	Length mm	Depth mm	Height mm			100 x 100 mm				50/60 Hertz
STGRF9-SD	900	650	925	2 + base	0.96	84	134a	7.4 Amp	10amp 3 pin plug	240V

* prior to installation see, installation guidelines, ventilation requirements and drainage options documents

ELECTRICAL POWER

Electrical power cord 2200mm
3 pin 10 amp 1 phase socket required.
Maximum ambient operating temperature climate class N max 32°C

Double heating elements

Maximum shelf load weight 15kg spread evenly

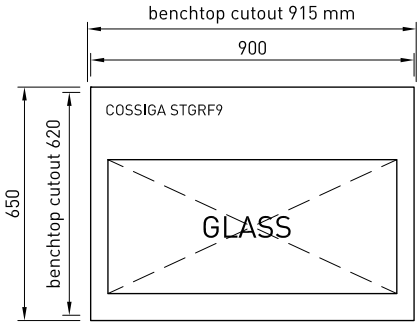

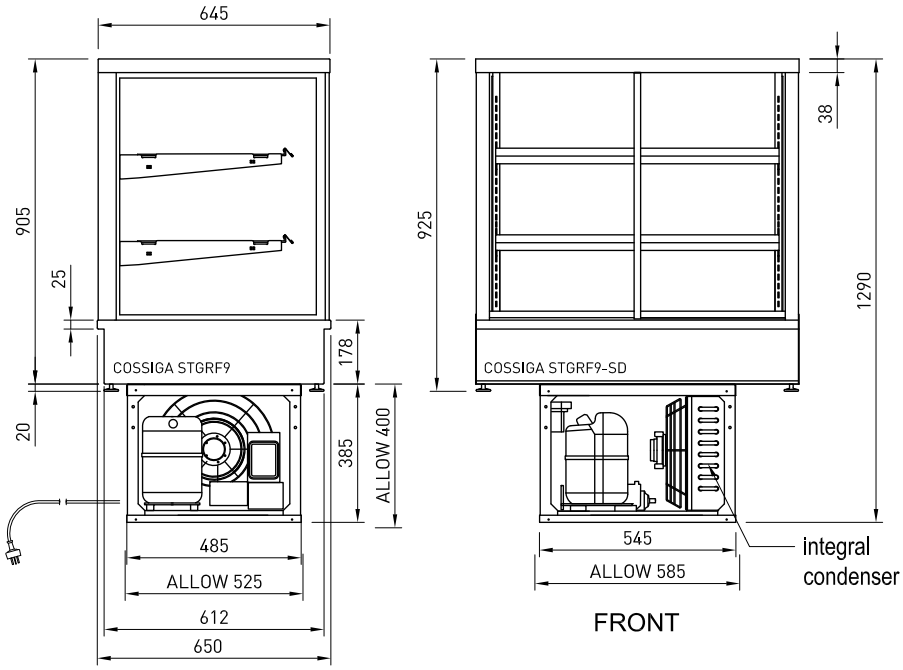

STG RF12-SD TOWER COUNTER SERIES cossiga

PRODUCT FEATURES

- Heated double glazed glass top and sides
- Sliding doors front and rear Double glazed
- Deck forced refrigeration
- Two adjustable shelves
- Ticket strips on shelves and deck
- Under shelf and canopy LED lights
- Integral condenser
- Self evaporating

CABINET DIMENSIONS & SPECIFICATIONS

Refrigerated 4° factory set point

Model	Cabinet			Shelving no.	Display m2	Total food units	Refrigerant	Operating Current	Connection	Voltage
	Length mm	Depth mm	Height mm			100 x 100 mm				50/60 Hertz
STGRF12-SD	1200	650	925	2 + base	1.32	121	134a	9.5 Amp	10amp lead only	240V

* prior to installation see, installation guidelines, ventilation requirements and drainage options documents

ELECTRICAL POWER

Electrical power cord 2200mm
3 pin 10 amp 1 phase socket required.
Maximum ambient operating temperature climate class N max 32°C

Double heating elements
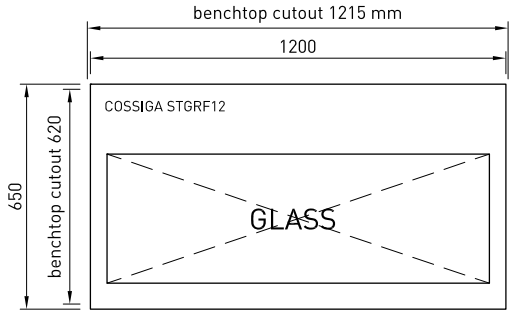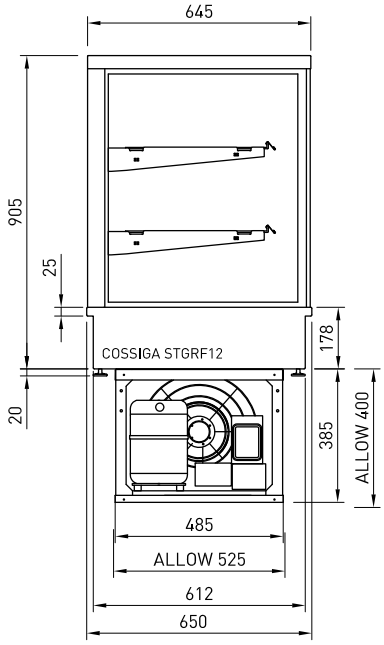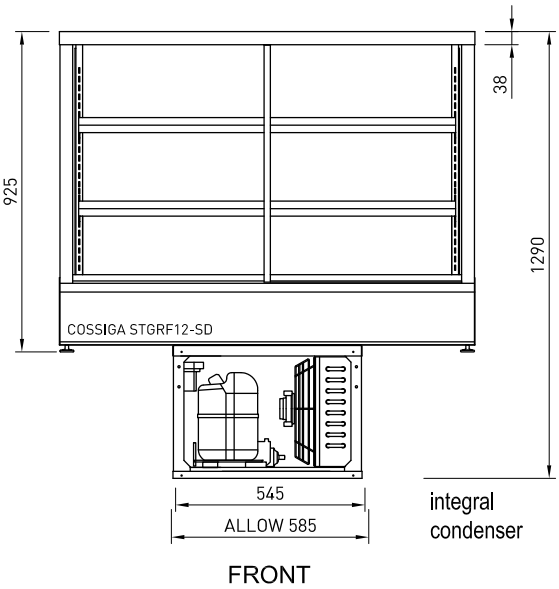
Maximum shelf load weight 15kg spread evenly