TOWER STG COMPACT CHILLED COUNTER TOP

cossiga

CC

STG CC9
STG CC12

- Compact chilled
- Integral condenser
- Deck forced refrigeration
- Sliding doors front and rear
- Double glazed
- Two adjustable shelves
- Ticket strips on shelves and deck
- Under shelf and canopy LED lights
- Self evaporating

Solid glass front - optional

Counter top only - cannot drop into benchtop

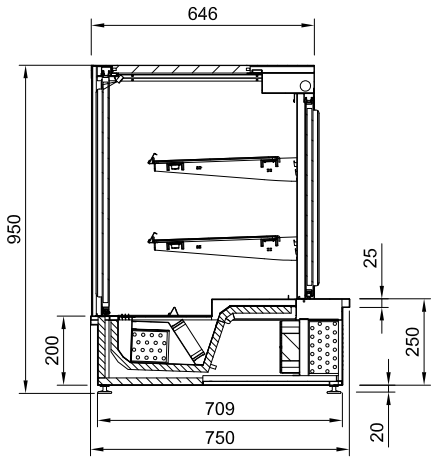

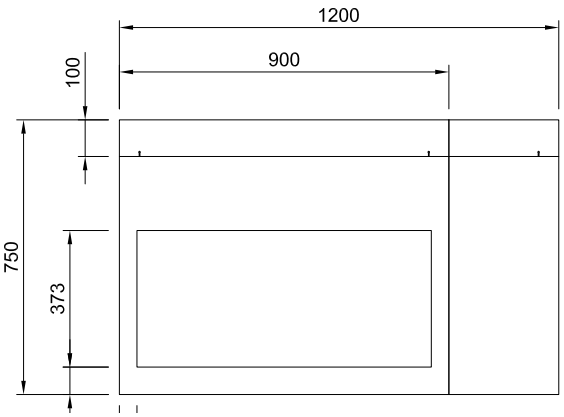

CABINET DIMENSIONS & SPECIFICATIONS

MODEL	CABINET				SHELVING		REFRIGERANT	TOTAL FOOD	OPERATING CURRENT	CONNECTION	VOLTAGE	PACKED FOR SHIPPING				
	LENGTH [MM]	DEPTH [MM]	HEIGHT [MM]	CUT OUTS	NO.	SIZE W X D		100MM UNITS				LENGTH [MM]	DEPTH [MM]	HEIGHT [MM]	WEIGHT [KG]	CUBE
STGCC9-SD	900	750	950	n/a	2+BASE	790 X 395	134A	84	4.5 AMP	10 AMP 3 PIN PLUG	220~240V	1000	730	1100	170	0.80
STGCC12-SD	1200	750	950	n/a	2+BASE	1090 X 395	134A	121	5.0 AMP	10 AMP 3 PIN PLUG	220~240V	1300	730	1100	200	1.04

SLIDING FRONT DOORS and rear glass sliding doors STGCC-SD
SOLID FRONT and rear glass sliding doors STGCC

Maximum shelf load weight 15kg spread evenly

Download C.A.D models or contact us on COSSIGA.COM

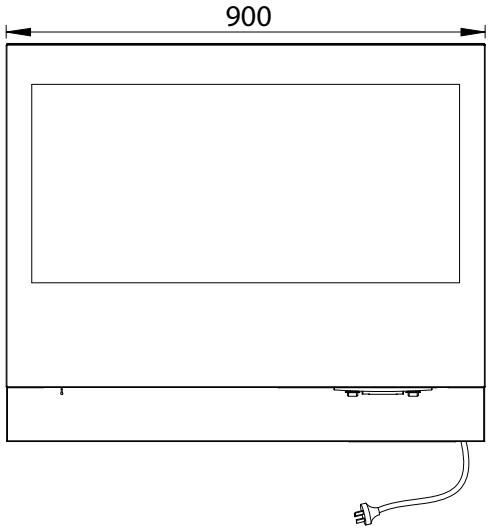

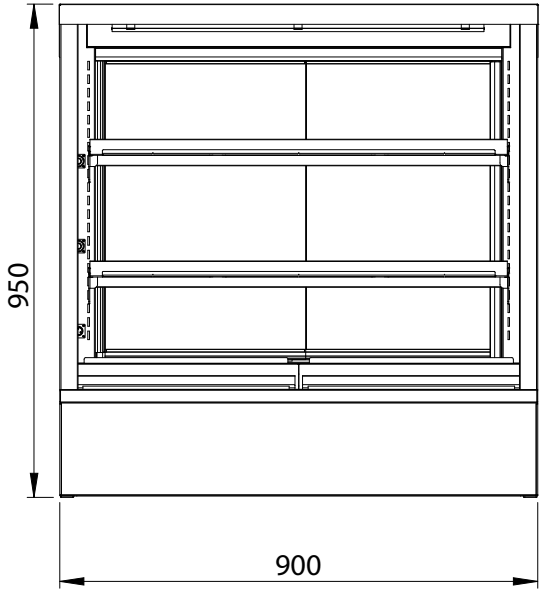

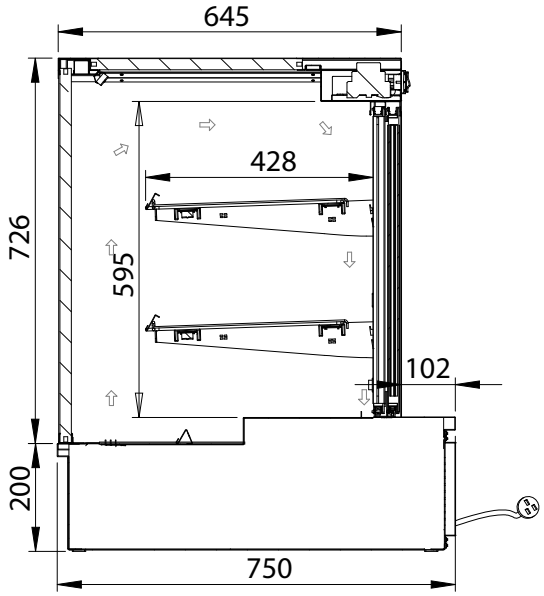

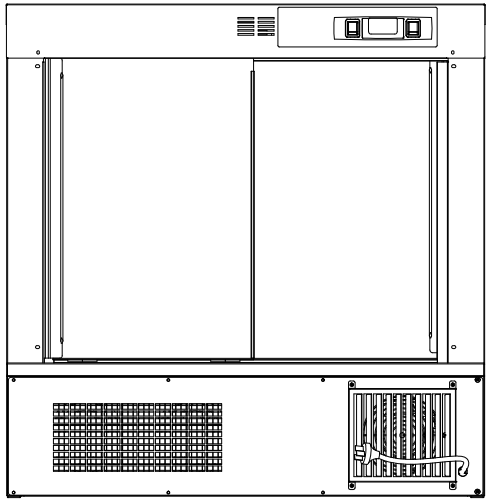

Download C.A.D models or contact us on COSSIGA.COM

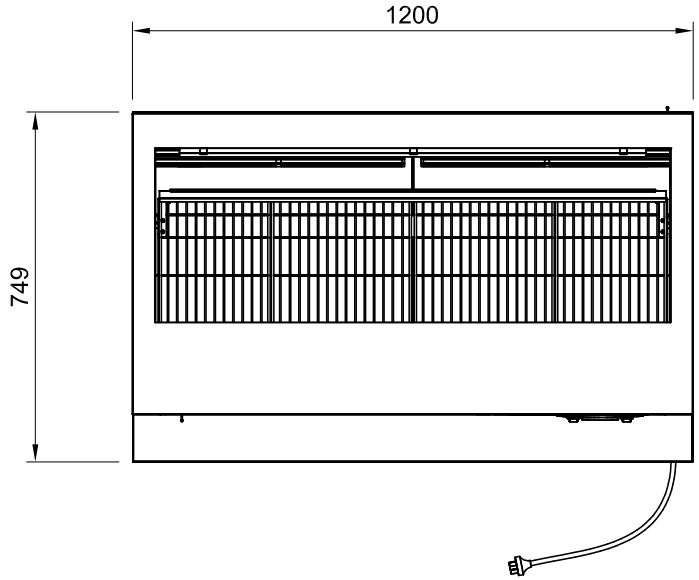

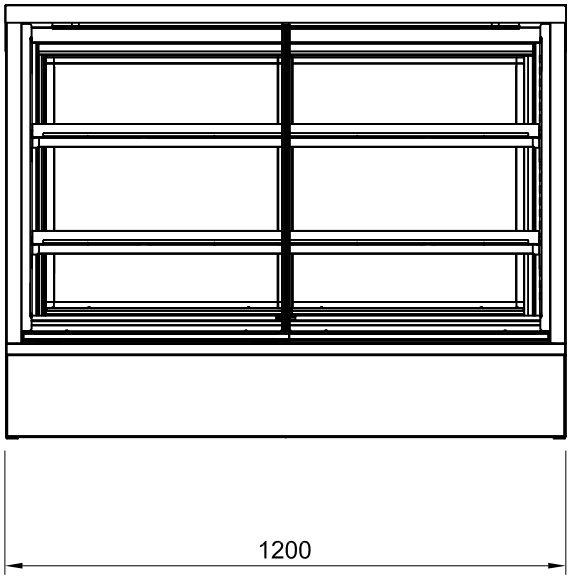

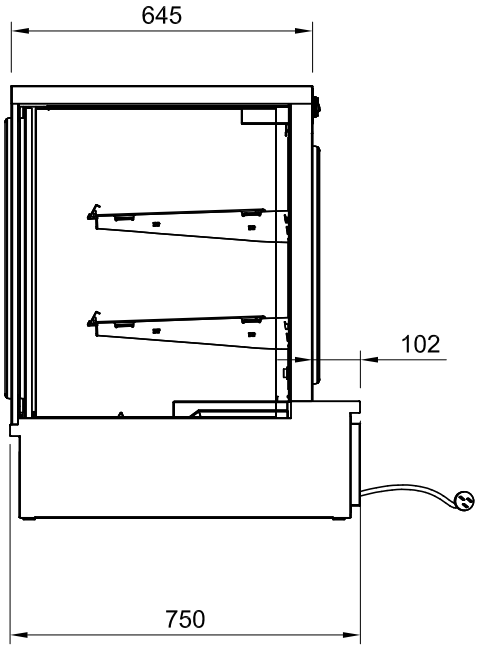

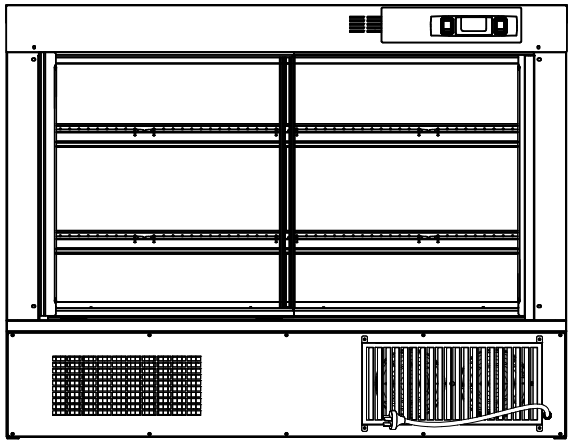

Download C.A.D models or contact us on COSSIGA.COM

AIRFLOW AND PLACEMENT GUIDE LINES

cossiga

Rear venting - Cannot be dropped into counter top

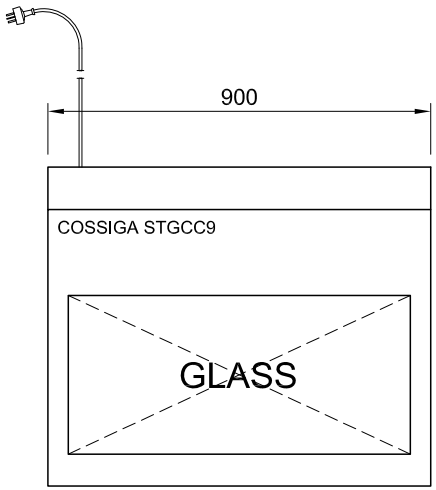

Allow 250mm at rear to any obstruction for rear venting

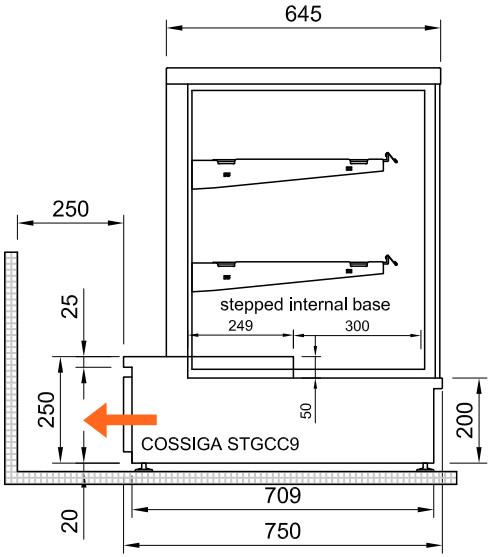

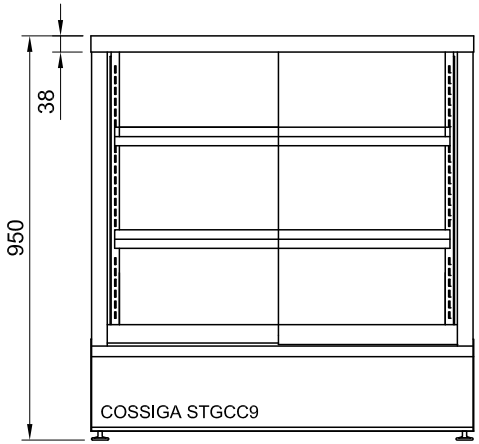

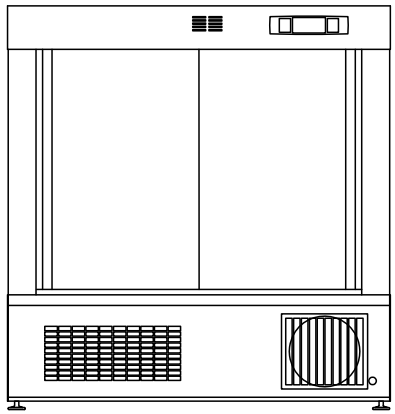

rear view - rear venting

Download C.A.D models or contact us on COSSIGA.COM

AIRFLOW AND PLACEMENT GUIDE LINES

cossiga

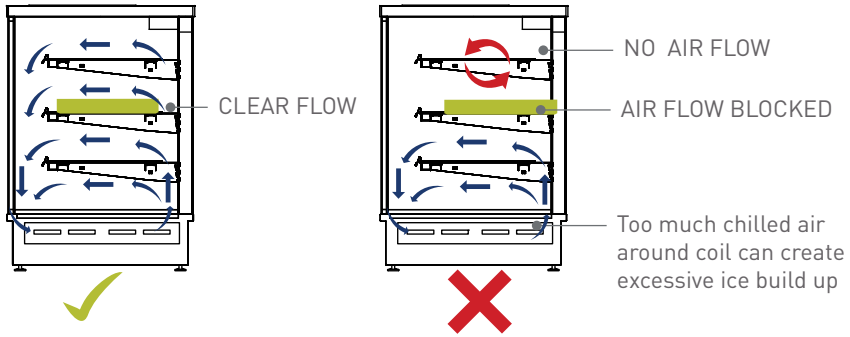

CORRECT AIRFLOW

IN CORRECT AIRFLOW

- Blocked air flow will retard operation on both HOT and COLD units
- Ensure trays or plates are not blocking air flow at rear

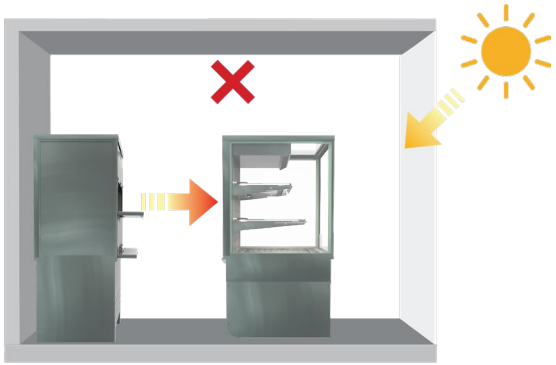

Environmental conditions

Heat from other equipment and natural conditions, such as direct sunlight straight on units, can cause cooling to fail and overload compressor

Locations to avoid

- Close to shop front exterior
- In an outside location
- In direct sunlight
- In a high wind
- Near any source producing excessive heat
- Service units more frequently in dusty or polluted areas

Top Mounted Controller Panel

For against wall installations
Sold individually

Base Tray - Heated Units

Stainless Steel
For heated units
Sold in pairs

Price Tabs

Stainless Steel
Write on with marker or adhesive tape
Measure 60mm x 30mm
Sold in packs of 20

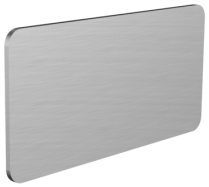

Tong Holder

Stainless Steel
Drop into counter tray race
Sold individually

Bag Holder

Stainless Steel
Drop into counter tray race
Solid individually

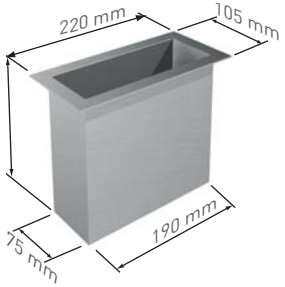

Ventilation Grill

Stainless Steel
Sold individually

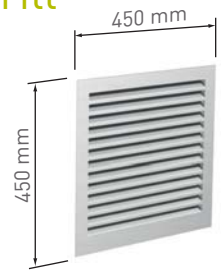

Humidity Dish

Stainless Steel
Perforated lid is removable

TICKET STRIP

cossiga

Shelf with ticket strip attached

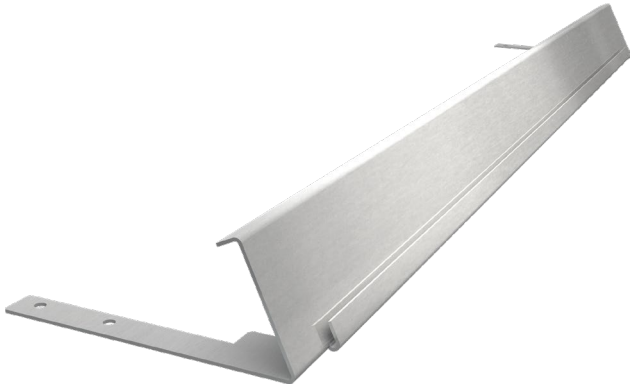

Ticket Strip

Stainless Steel
Attaches to shelf frame

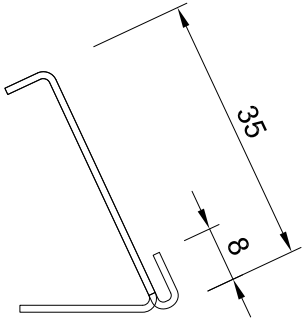

End Profile

Lengths

CABINET LENGTH MM	TICKET STRIP LENGTH
600	475
900	775
1200	1075
1500	1375

Price Tabs

Stainless Steel
Write on with marker or adhesive tape
Measure 60mm x 30mm
Sold in packs of 20

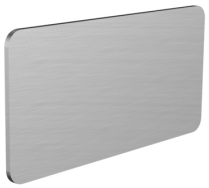

Glass Shelf Options

Standard wire racks are removed and replaced with 6mm toughened glass panes

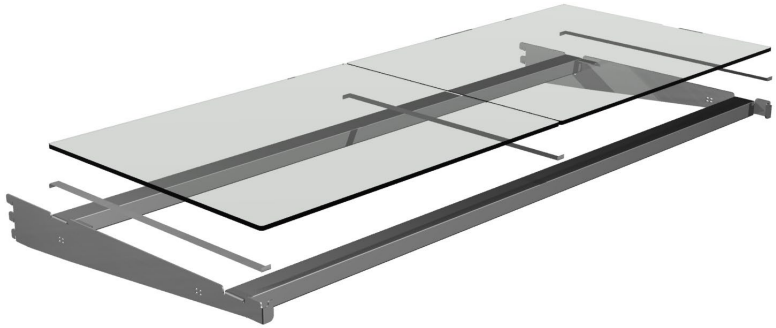

Maximum shelf load weight 15kg spread evenly

MODEL	GLASS	WIDTH MM	DEPTH MM	PER SHELF PANES	SHELVES	TOTAL PANES
STGRF6	6MM TOUGHENED - POLISHED EDGES	240	385	2	2	4
STGRF9	6MM TOUGHENED - POLISHED EDGES	390	385	2	2	4
STGRF12	6MM TOUGHENED - POLISHED EDGES	540	385	2	2	4
STGRF15	6MM TOUGHENED - POLISHED EDGES	690	385	2	2	4
STGHT6	6MM TOUGHENED - POLISHED EDGES	240	385	2	3	6
STGHT9	6MM TOUGHENED - POLISHED EDGES	390	385	2	3	6
STGHT12	6MM TOUGHENED - POLISHED EDGES	540	385	2	3	6
STGAB6	6MM TOUGHENED - POLISHED EDGES	240	385	2	3	6
STGAB9	6MM TOUGHENED - POLISHED EDGES	390	385	2	3	6
STGAB12	6MM TOUGHENED - POLISHED EDGES	540	385	2	3	6

Support bracket

COLOUR WRAP OPTIONS

cossiga

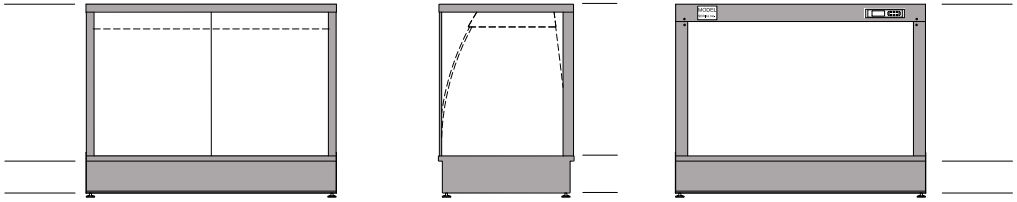

COUNTER TOP MODEL - CURVED OR SQUARE

all exterior visible areas covered

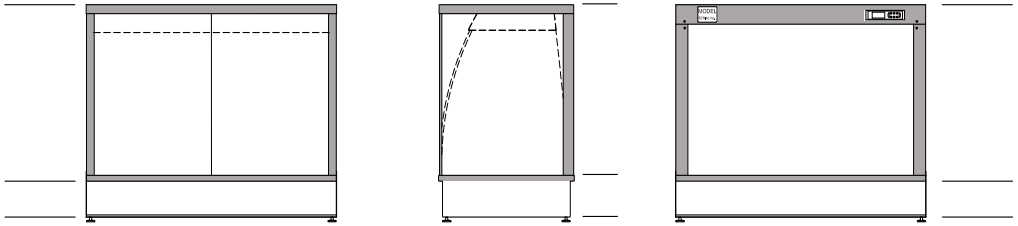

all exterior top visible areas covered

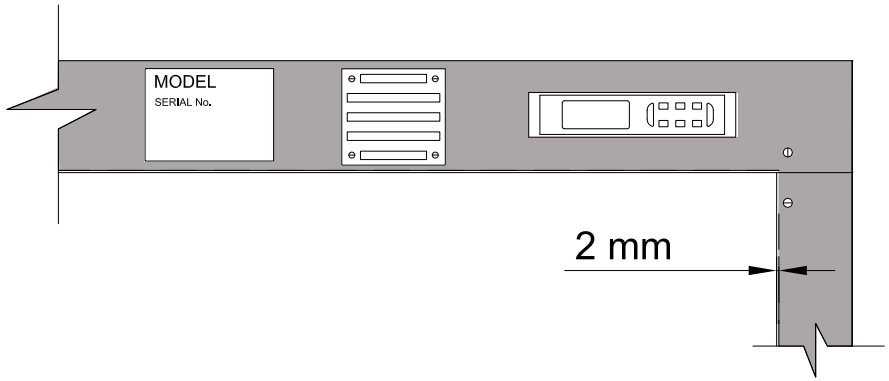

2mm gap left around rear frame

Rear of units cut around serial number plate, exhaust fan and controller

BLOCKS
WORK AREAS
BEHIND
UNTS

ADDS
DEPTH TO YOUR
DISPLAYS

Mirror Film

- Applied to the inside glass rear doors
- Suitable for heated and chilled units