TOWER BTG CHILLED AND HEATED

cossiga

RF

BTG RF6
BTG RF9
BTG RF12
BTG RF15
BTG RF18

- Heated double glazed glass top, sides and front
- Heated rear sub frame
- Argon filled rear doors
- Sliding rear doors
- Deck forced refrigeration
- Three adjustable shelves
- Ticket strips on shelves and base
- Undershelf and canopy LED lights
- Integral condensor
- Sliding front doors - optional (excl RF18)

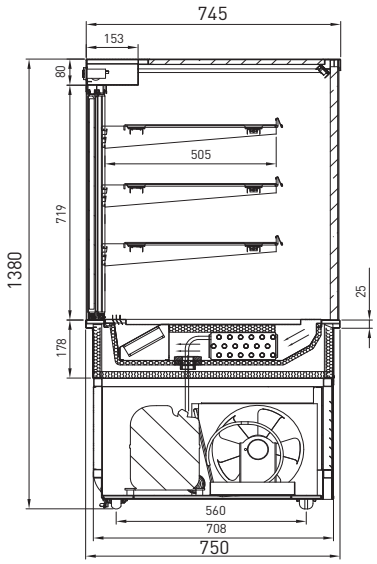

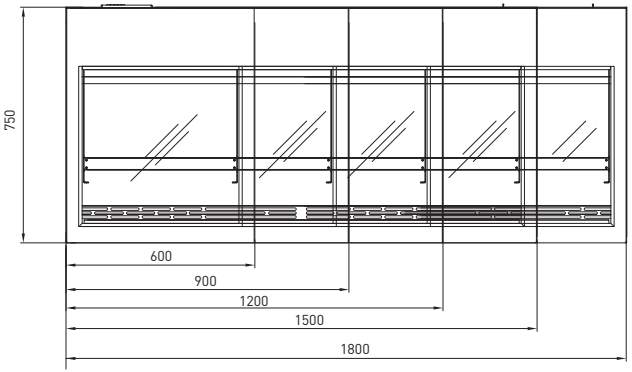

Rear intake and extract ventilation system

HT

BTG HT6
BTG HT9
BTG HT12
BTG HT15

- Deck forced heating
- SIngle glazed
- Sliding rear doors
- Four adjustable shelves
- Ticket strips on shelves and base
- Undershelf and canopy LED lights
- Sliding front doors - optional

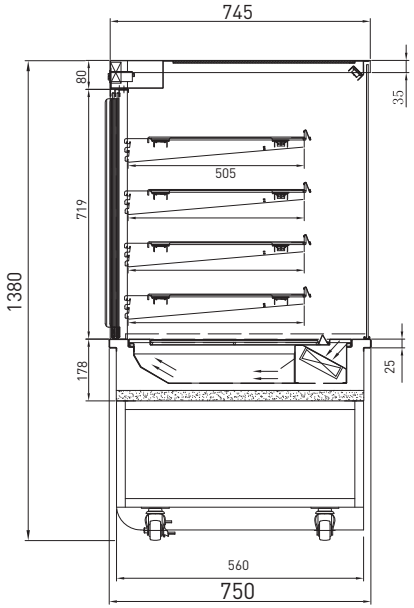

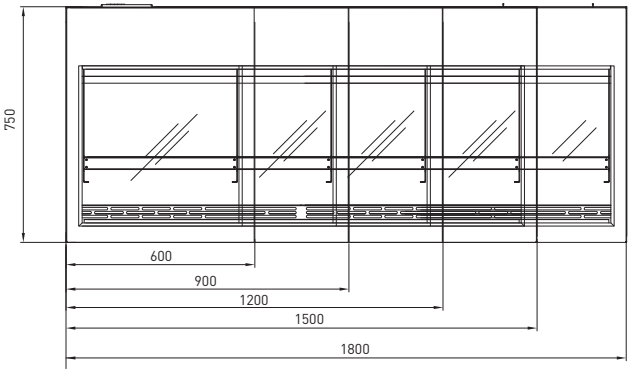

Download C.A.D models or contact us on COSSIGA.COM

AB

BTG AB6
BTG AB9
BTG AB12
BTG AB15

- SIngle glazed
- Sliding rear doors
- Four adjustable shelves
- Ticket strips on shelves and base
- Undershelf and canopy LED lights
- Sliding front doors - optional
- Ambient converted from heated
- Air removal fan installed in ceiling

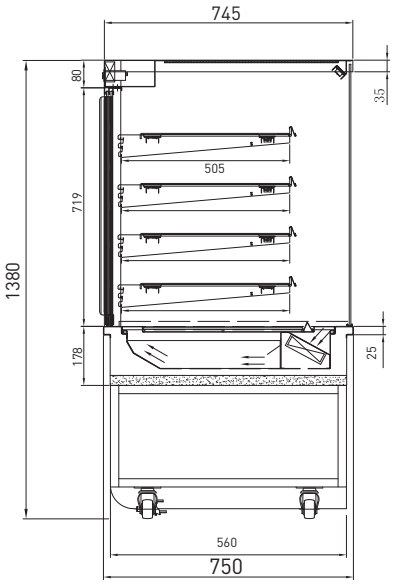

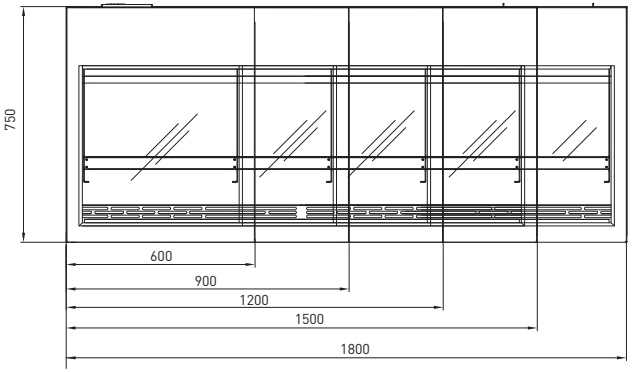

RA

BTG RA10
BTG RA15

- Combo unit chilled and ambient
- Heated front and top glass
- Soild front only
- Sliding rear doors - chilled section
- Hinged rear door - ambient section
- Ticket strips on shelves and base
- Undershelf and canopy LED lights

Front doors not available for this model

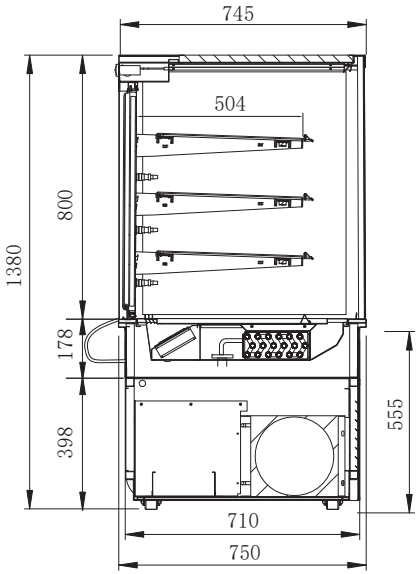

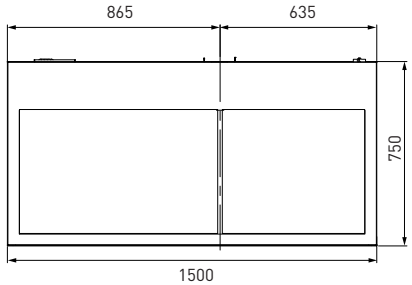

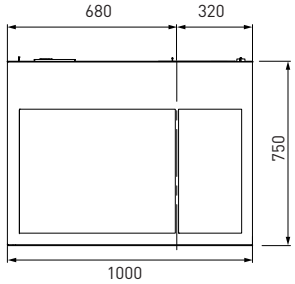

Rear intake and extract ventilation system

OR

BTG OR6
BTG OR9
BTG OR12
BTG OR15

- Open front
- 2 adjustable shelves
- Stainless steel hinged rear doors
- Deck forced refrigeration
- Double glazed glass ends
- Two adjustable glass shelves
- Ticket strips on shelves and base
- Undershelf and canopy LED lights
- Pull down night blind

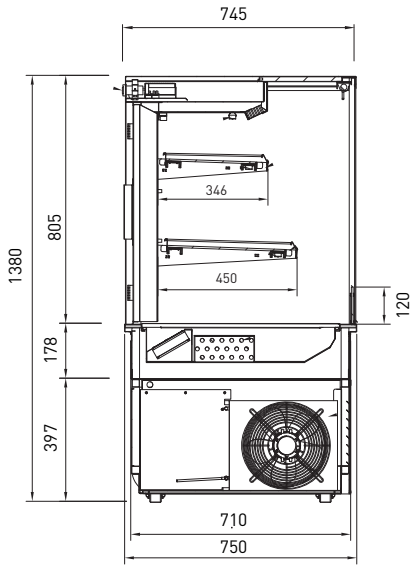

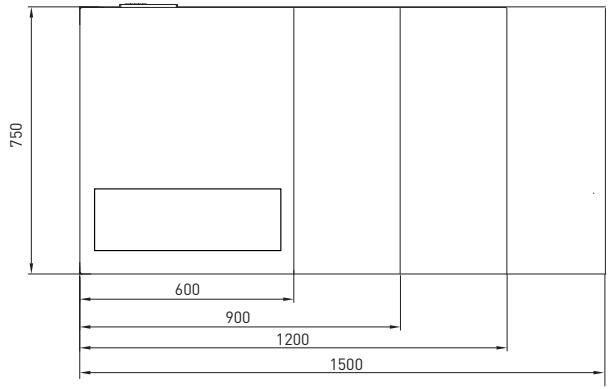

Rear intake and extract ventilation system

OH

BTG OH6
BTG OH9

- Open front heated
- 3 adjustable shelves
- Individual shelf heating
- Deck forced heating
- Single glazed
- Ticket strips on shelves and base
- Undershelf and canopy LED lights

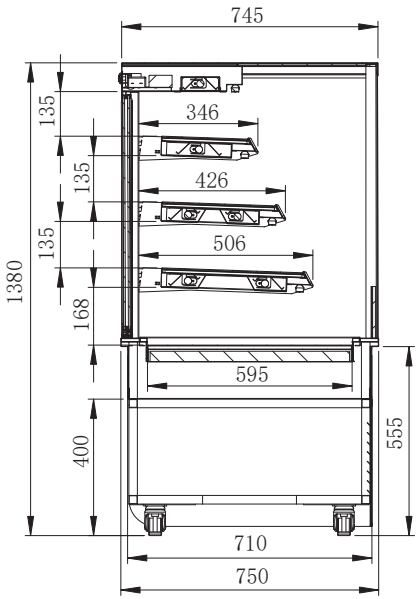

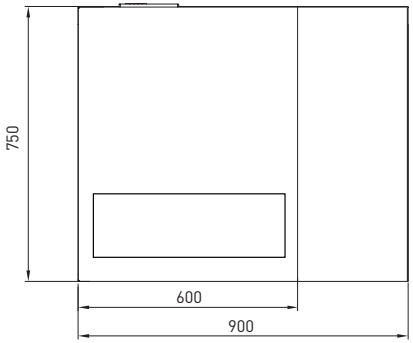

TOWER BTG SPECIFICATIONS

cossiga

CABINET DIMENSIONS & SPECIFICATIONS

MODEL	CABINET			SHELVING	OPERATING TEMP	POWER CORD LENGTH	SHELF	BASE TRAY	FREQUENCY	REFRIGERANT	OPERATING CURRENT	CONNECTION	VOLTAGE	PACKED FOR SHIPPING			
	LENGTH [MM]	DEPTH [MM]	HEIGHT [MM]		DEG C		W X D	W X D						LENGTH [MM]	DEPTH [MM]	HEIGHT [MM]	WEIGHT
BTGRF6	600	750	1380	3 + BASE	3-5	2200MM	490 X 445	540 x510	50/60 HZ	134A	4.2 AMP	10AMP 3 PIN PLUG	220-240V	700	830	1550	175
BTGRF9	900	750	1380	3 + BASE	3-5	2200MM	790 X 445	840 x510	50/60 HZ	134A	4.5 AMP	10 AMP 3 PIN PLUG	220-240V	1000	830	1550	224
BTGRF12	1200	750	1380	3 + BASE	3-5	2200MM	1090 X 445	1140 x 510	50/60 HZ	134A	5.0 AMP	10 AMP 3 PIN PLUG	220-240V	1300	830	1550	273
BTGRF15	1500	750	1380	3 + BASE	3-5	2200MM	1390 X 445	1440 x 510	50/60 HZ	134A	6.0 AMP	10 AMP 3 PIN PLUG	220-240V	1600	830	1550	329
BTGRF18	1800	750	1380	3 x 2 + BASE	3-5	2200MM	820 X 445	1740 x 510	50/60 HZ	134A	7.8 AMP	10 AMP 3 PIN PLUG	220-240V	1900	830	1550	
BTGHT6	600	750	1380	4 + BASE	75-85	2200MM	490 X 445	540 x 510	50/60 HZ	N/A	4.1 AMP	10 AMP 3 PIN PLUG	220-240V	700	830	1550	118
BTGHT9	900	750	1380	4 + BASE	75-85	2200MM	790 X 445	840 x 510	50/60 HZ	N/A	6.2 AMP	10 AMP 3 PIN PLUG	220-240V	1000	830	1550	150
BTGHT12	1200	750	1380	4 + BASE	75-85	2200MM	1090 X 445	1140 x 510	50/60 HZ	N/A	8.3 AMP	10 AMP 3 PIN PLUG	220-240V	1300	830	1550	182
BTGHT15	1500	750	1380	4 + BASE	75-85	2200MM	1390 X 445	1440 x 510	50/60 HZ	N/A	10.4 AMP	15 AMP 3 PIN PLUG	220-240V	1600	830	1550	214
BTGAB6	600	750	1380	4 + BASE	N/A	2200MM	490 X 445	540 x 510	50/60 HZ	N/A	0.2 AMP	10 AMP 3 PIN PLUG	220-240V	700	830	1550	133
BTGAB9	900	750	1380	4 + BASE	N/A	2200MM	790 X 445	840 x 510	50/60 HZ	N/A	0.3 AMP	10 AMP 3 PIN PLUG	220-240V	1000	830	1550	133
BTGAB12	1200	750	1380	4 + BASE	N/A	2200MM	1090 X 445	1140 x 510	50/60 HZ	N/;A	0.4 AMP	10 AMP 3 PIN PLUG	220-240V	1300	830	1550	157
BTGAB15	1500	750	1380	4 + BASE	N/A	2200MM	1390 X 445	1440 x 510	50/60 HZ	N/A	0.5 AMP	10 AMP 3 PIN PLUG	220-240V	1600	830	1550	158
BTGRA10	1000	750	1380	3+BASE 3+BASE	3-5 AMBIENT	2200MM	615 X 445 238 X 445	615 x 510 238 x 510	50/60 HZ	134A	4.3 AMP	10 AMP 3 PIN PLUG	220-240V	1100	830	1550	260
BTGRA15	1500	750	1380	3+BASE 3+BASE	3~5 AMBIENT	2200MM	790 X 445 564 X 445	790 X 510 564 X 510	50/60 HZ	134A	4.6 AMP	10 AMP 3 PIN PLUG	220-240V	1600	830	1550	350

Maximum shelf load weight 15kg spread evenly

Front doors not available for these models RF18, RA10, RA15

CABINET DIMENSIONS & SPECIFICATIONS

MODEL	CABINET			SHELVING	SHELVES SIZE					FREQUENCY	REFRIGERANT	OPERATING CURRENT	CONNECTION	VOLTAGE	PACKED FOR SHIPPING			
	LENGTH (MM)	DEPTH (MM)	HEIGTH (MM)		TOP	2ND	3RD	4TH	BASE(WXD)	50/60 HZ					LENGTH (MM)	DEPTH (MM)	HEIGTH (MM)	WEIGHT (KG)
BTGOR6	600	750	1380	2+BASE	490X290	490X380	NA	NA	545X515	50/60 HZ	134A	3.3AMP	10AMP 3 PIN PLUG	220~240V	700	830	1550	175
BTGOR9	900	750	1380	2+BASE	790X290	790X380	NA	NA	845X515	50/60 HZ	134A	3.7AMP	10AMP 3 PIN PLUG	220~240V	1000	830	1550	224
BTGOR12	1200	750	1380	2+BASE	1090X290	1090X380	NA	NA	1145X515	50/60 HZ	134A	5.4AMP	10AMP 3 PIN PLUG	220~240V	1300	830	1550	273
BTGOR15	1500	750	1380	2+BASE	1390X290	1390X380	NA	NA	1445X515	50/60 HZ	134A	6.5AMP	10AMP 3 PIN PLUG	220~240V	1600	830	1550	285
BTGOH6	600	750	1380	3+BASE	490X255	490X335	490X415	NA	548X595	50/60 HZ	NA	8.1AMP	10AMP 3 PIN PLUG	220~240V	700	830	1550	119
BTGOH9	900	750	1380	3+BASE	790X255	790X335	790X415	NA	848X595	50/60 HZ	NA	12.6AMP	15AMP 3 PIN PLUG	220~240V	1000	830	1550	153

Maximum shelf load weight 15kg spread evenly

Front doors not available for these models RF18, RA10, RA15

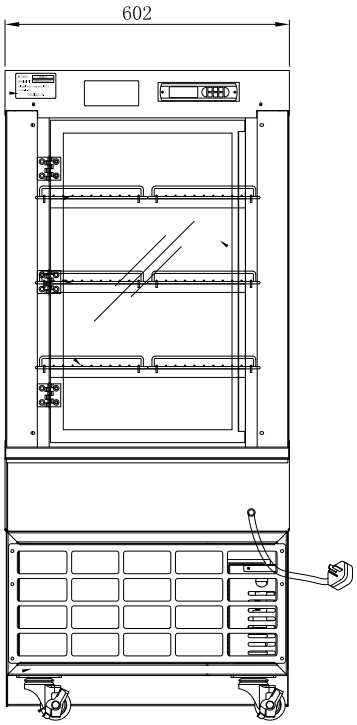

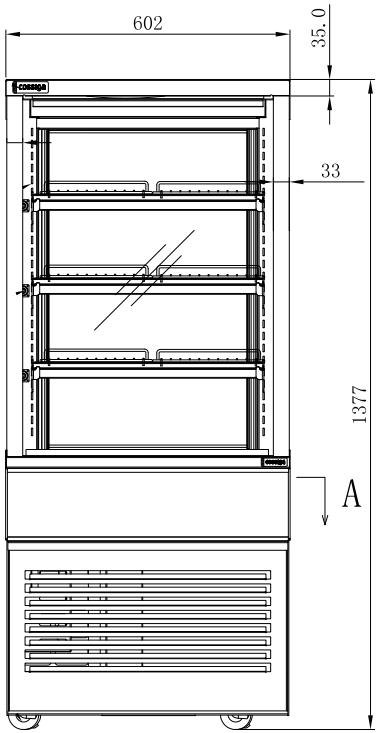

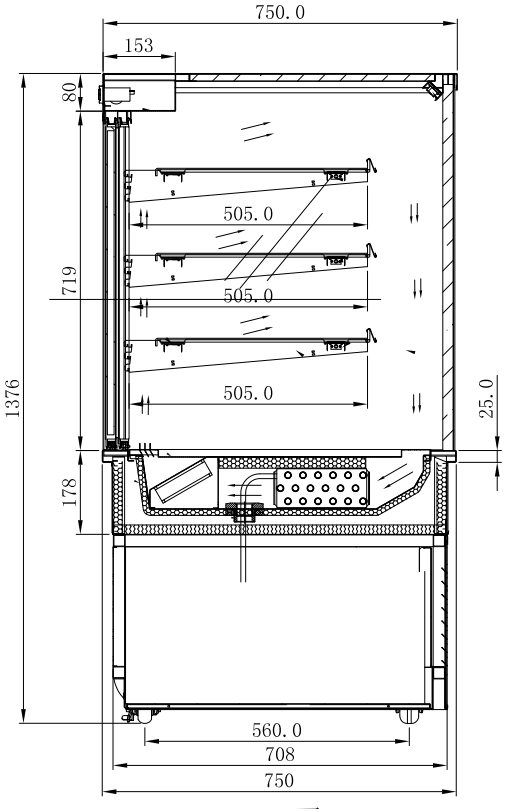

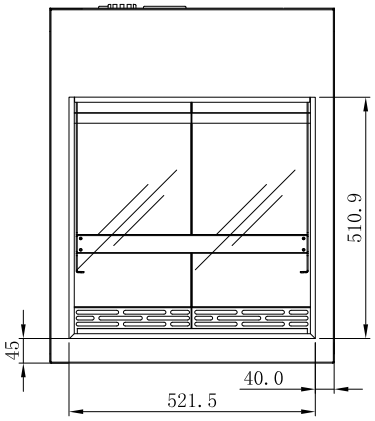

Download C.A.D models or contact us on COSSIGA.COM

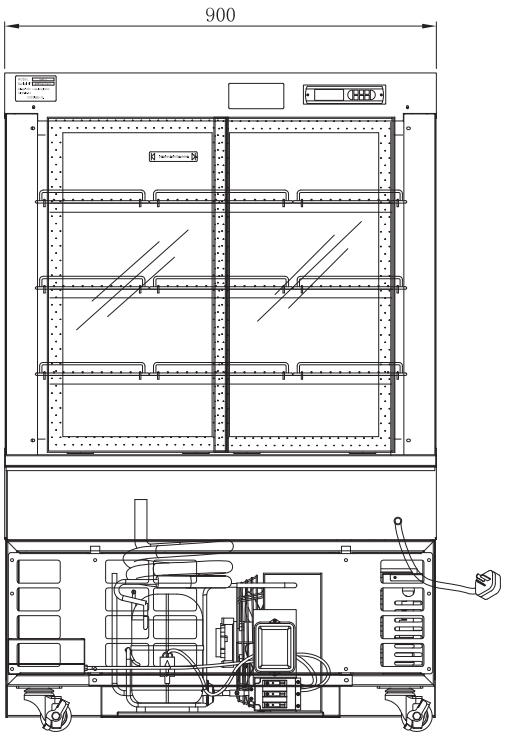

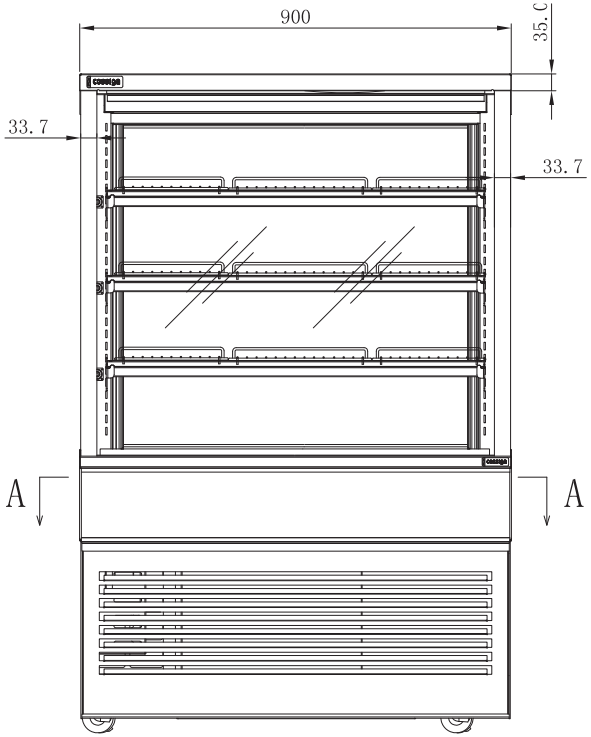

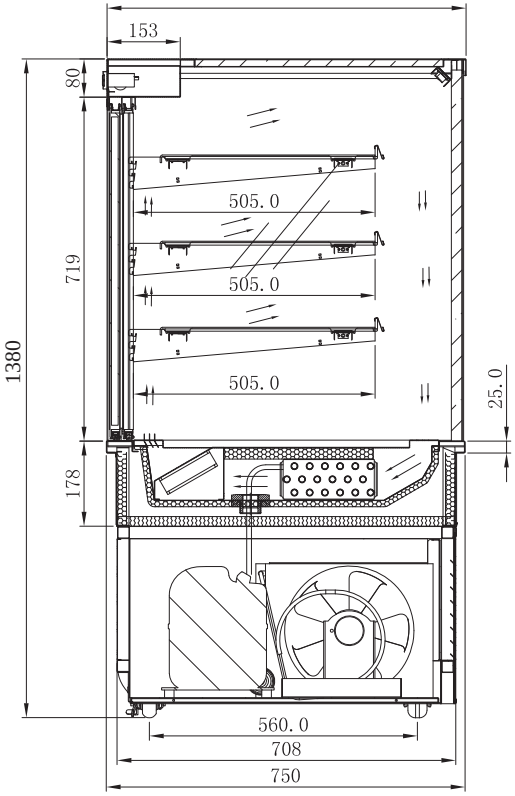

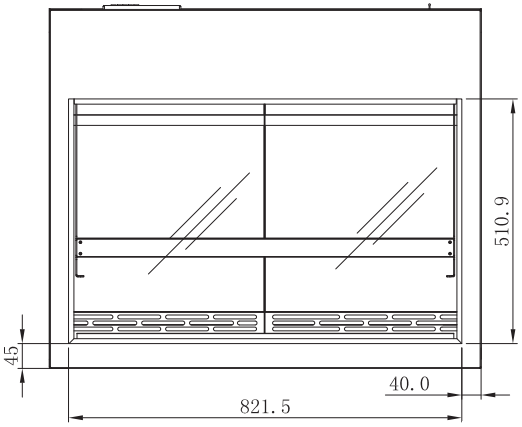

Download C.A.D models or contact us on COSSIGA.COM

TOWER BTGRF12

cossiga

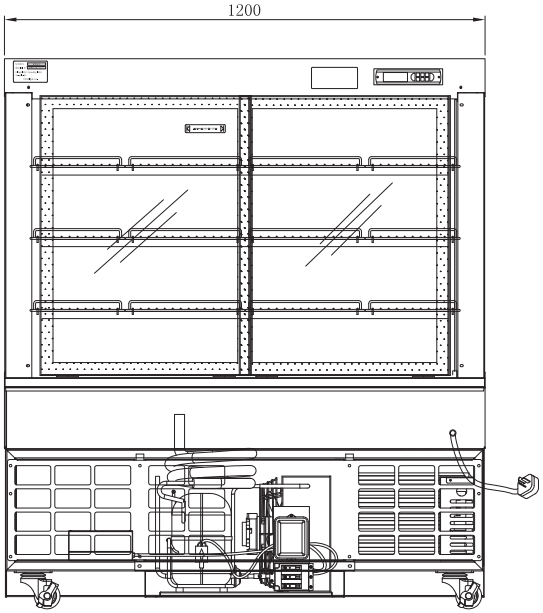

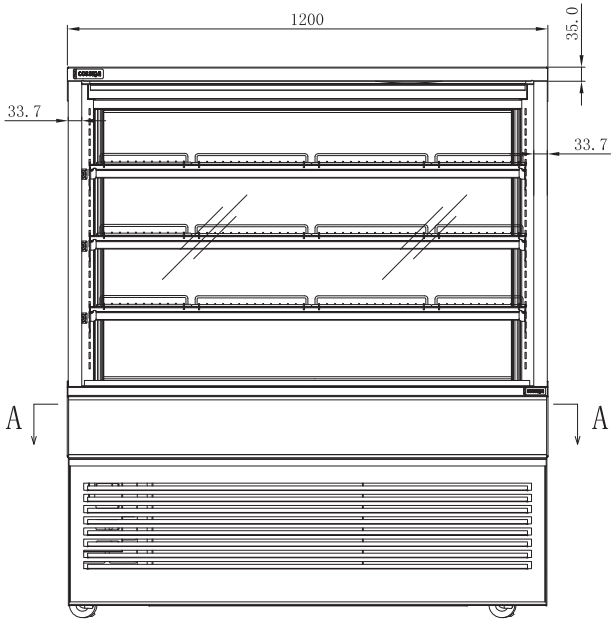

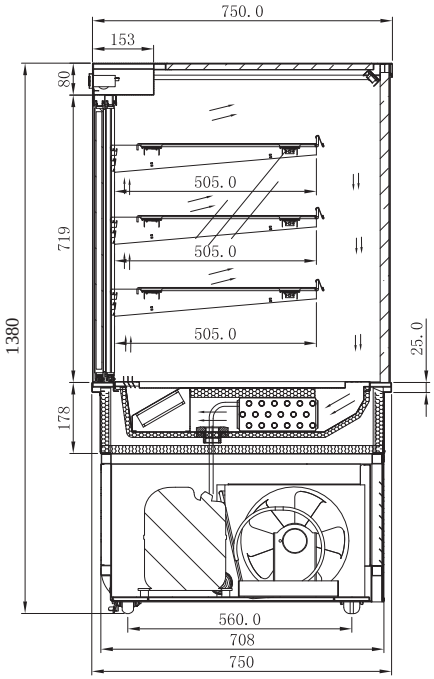

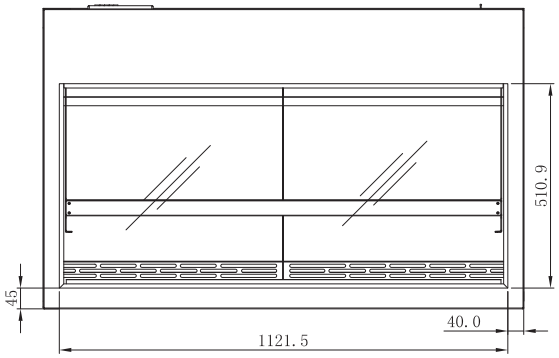

Download C.A.D models or contact us on COSSIGA.COM

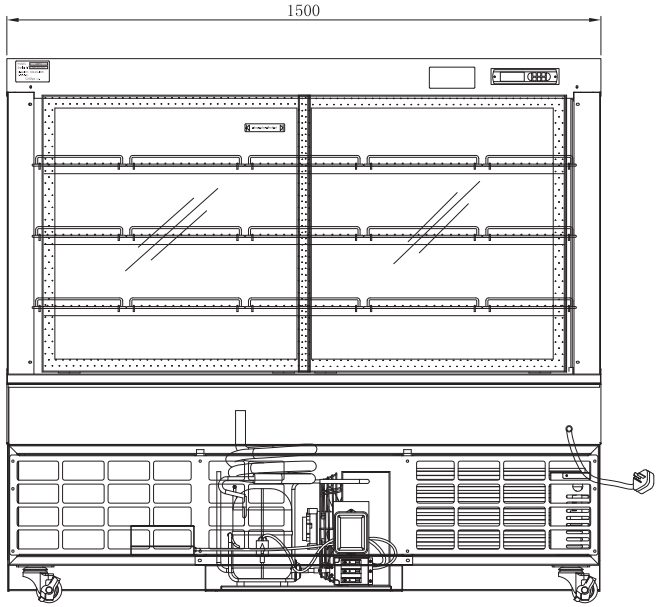

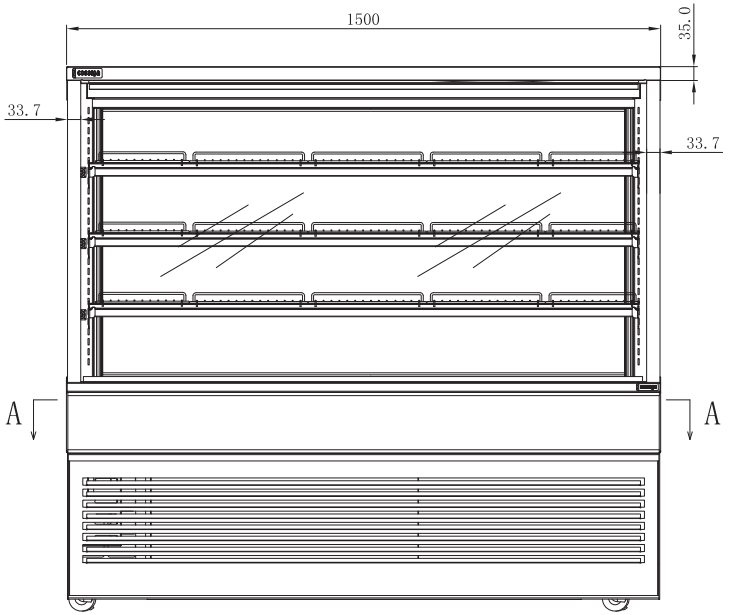

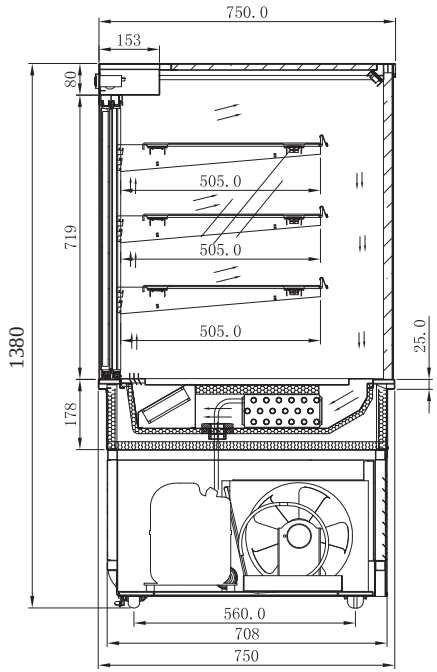

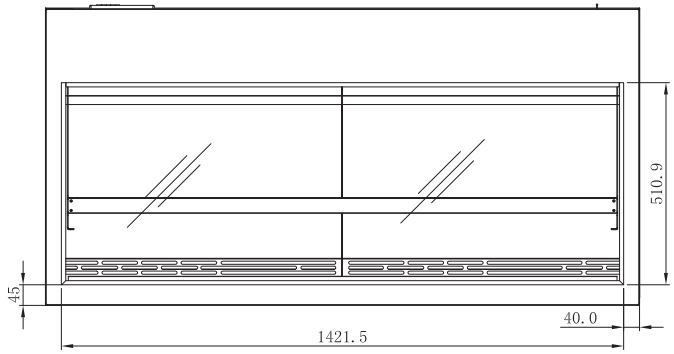

Download C.A.D models or contact us on COSSIGA.COM

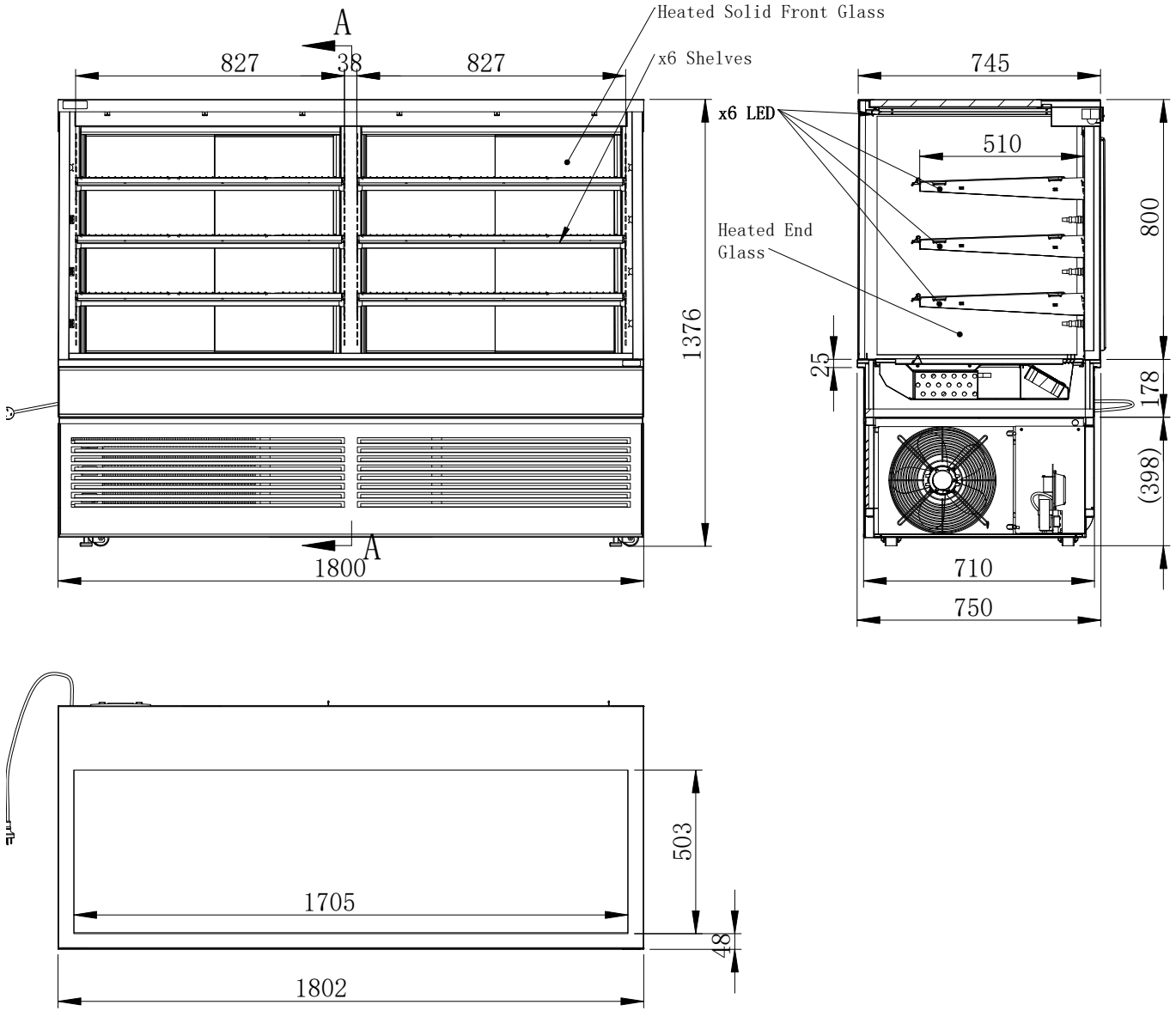

Download C.A.D models or contact us on COSSIGA.COM

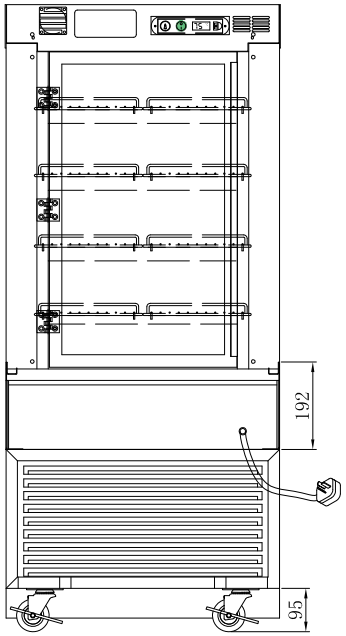

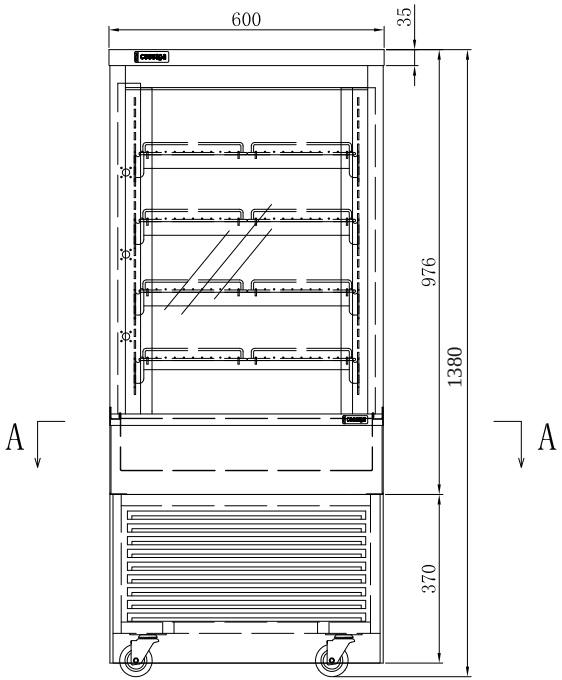

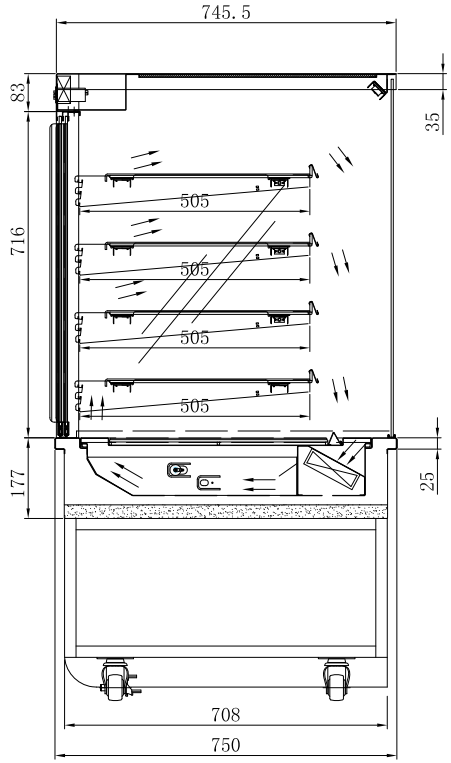

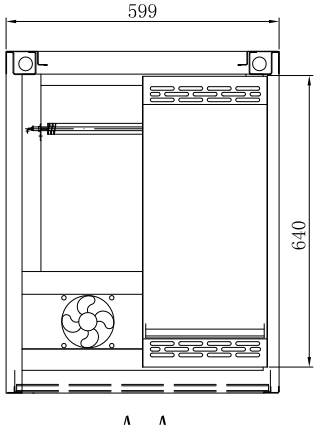

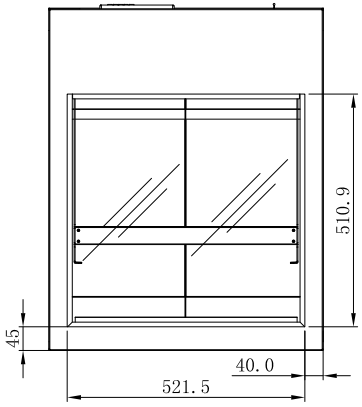

Download C.A.D models or contact us on COSSIGA.COM

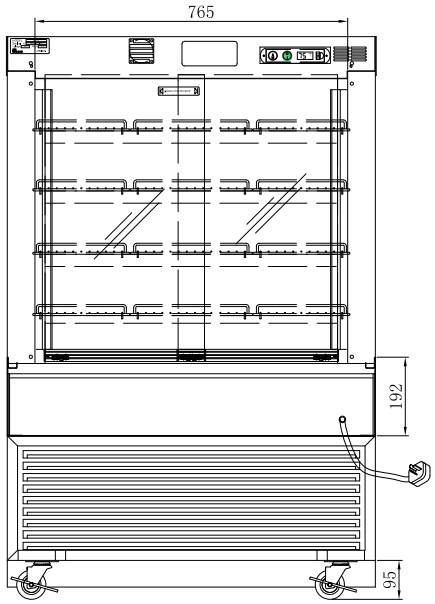

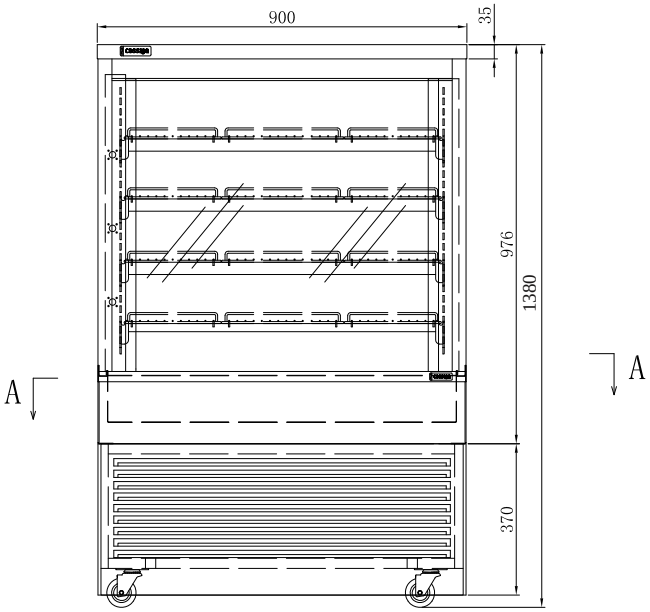

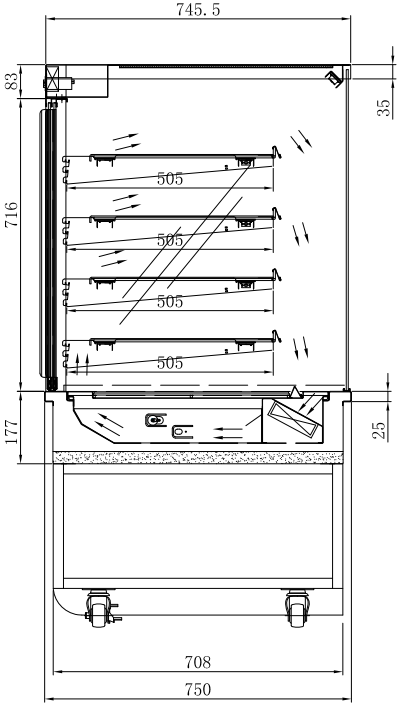

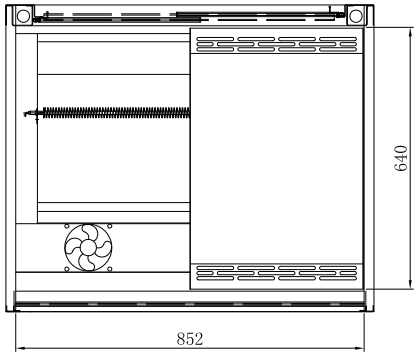

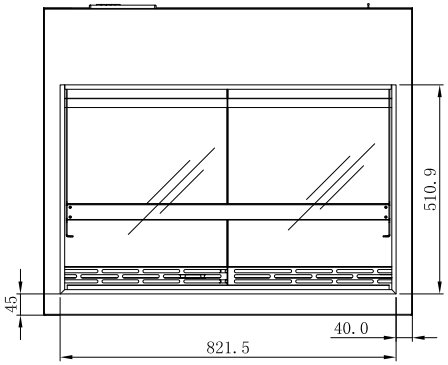

Download C.A.D models or contact us on COSSIGA.COM

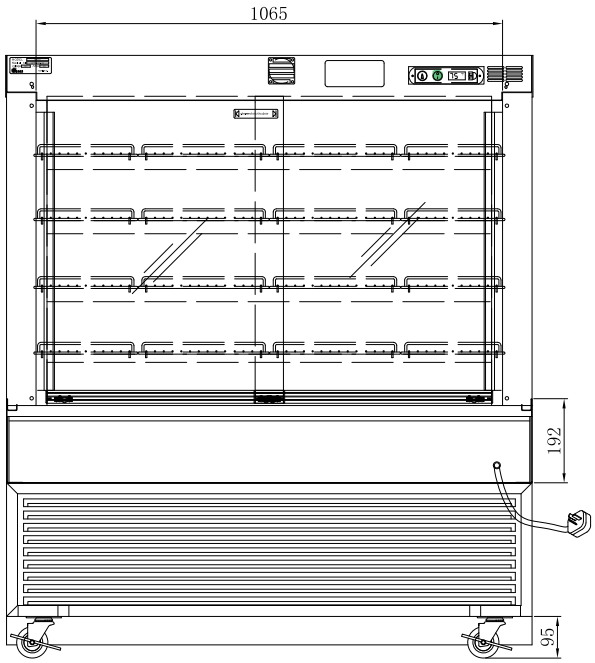

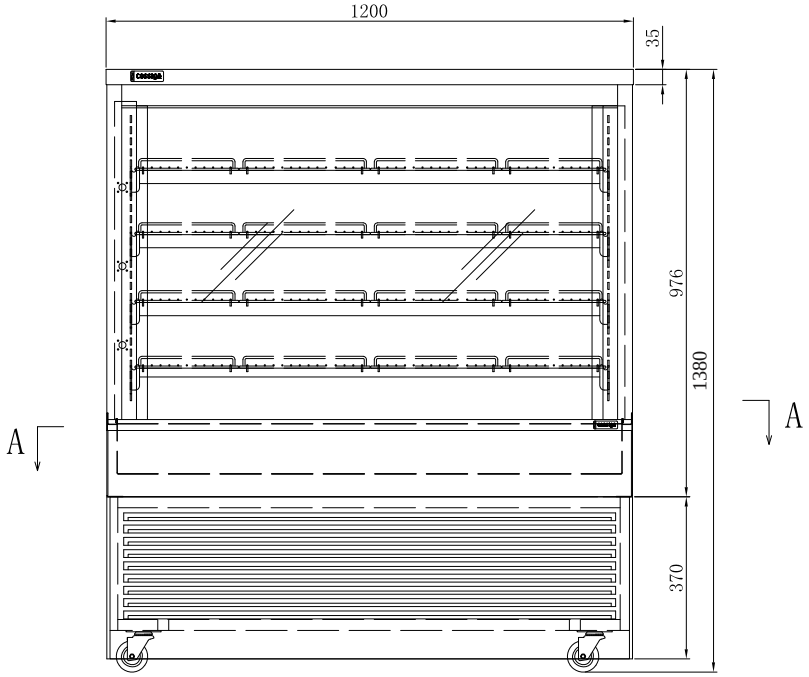

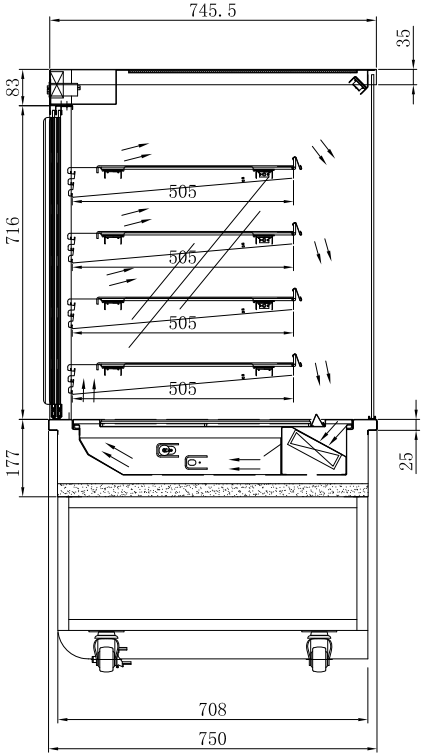

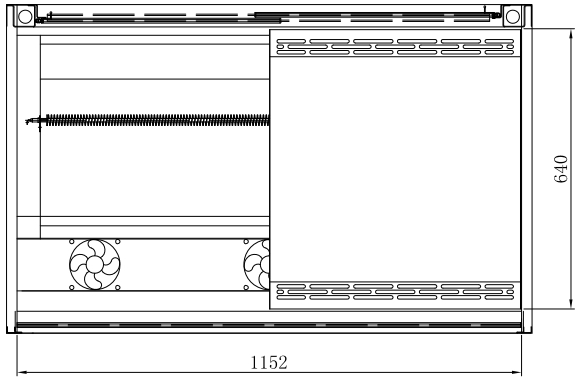

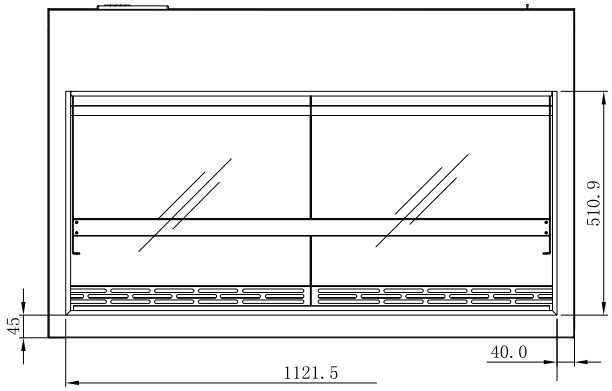

Download C.A.D models or contact us on COSSIGA.COM

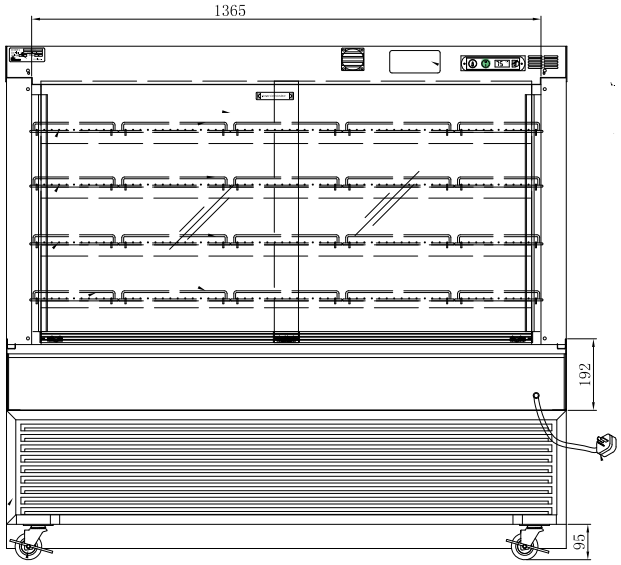

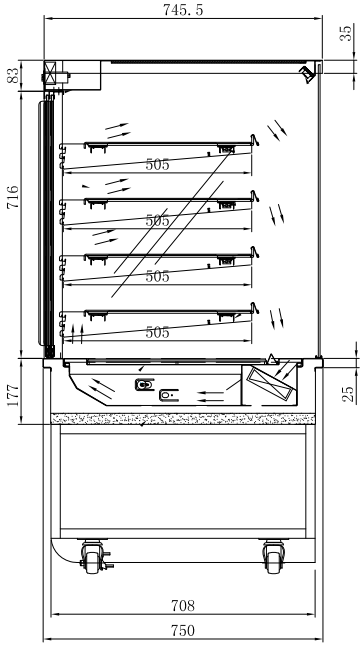

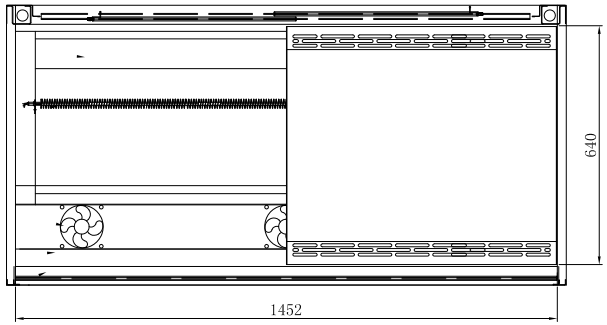

A–A

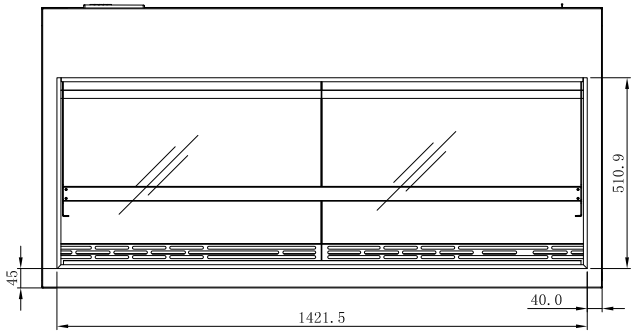

Download C.A.D models or contact us on COSSIGA.COM

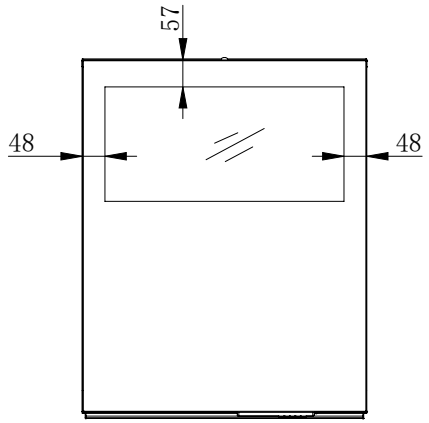

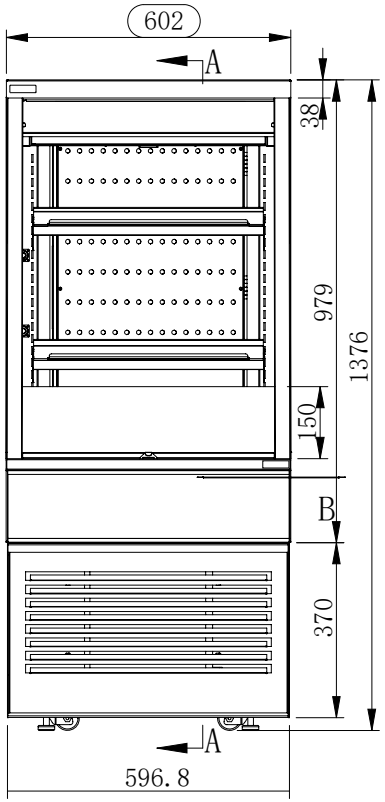

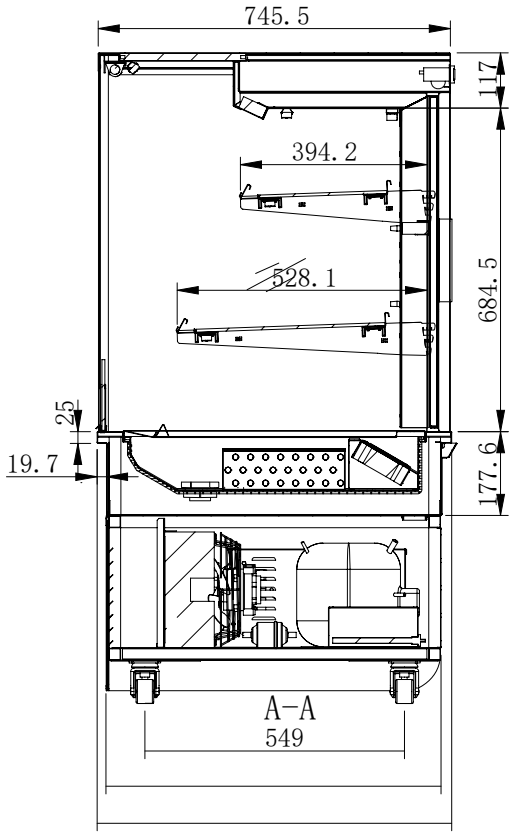

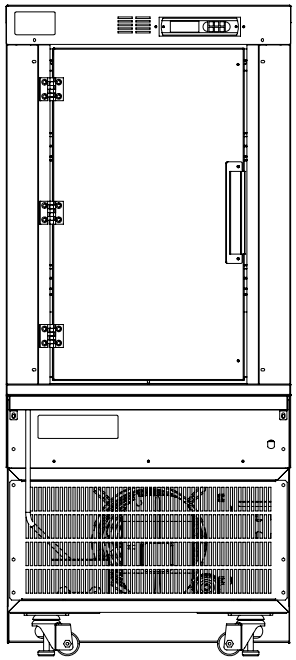

Download C.A.D models or contact us on COSSIGA.COM

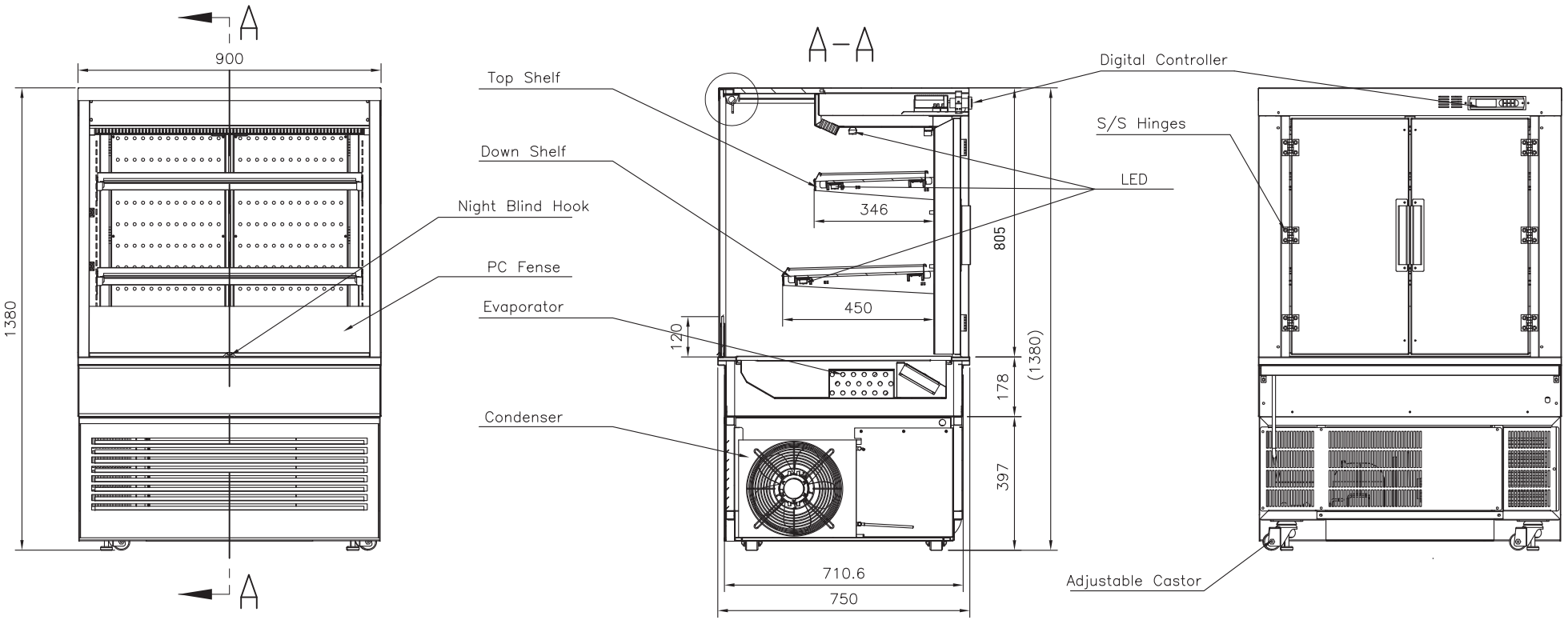

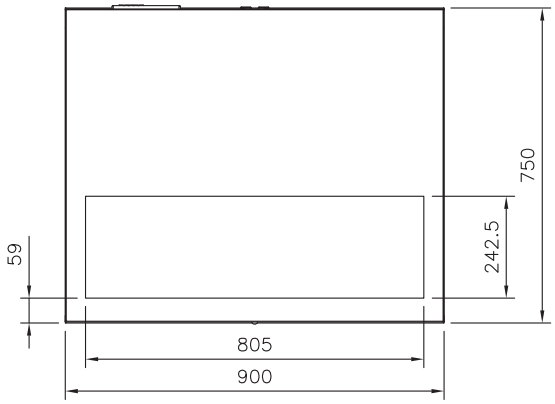

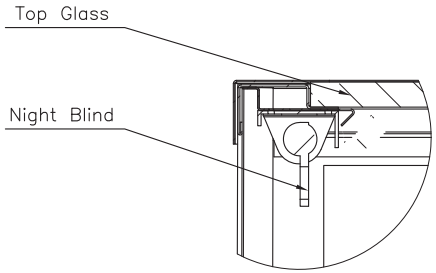

Download C.A.D models or contact us on COSSIGA.COM

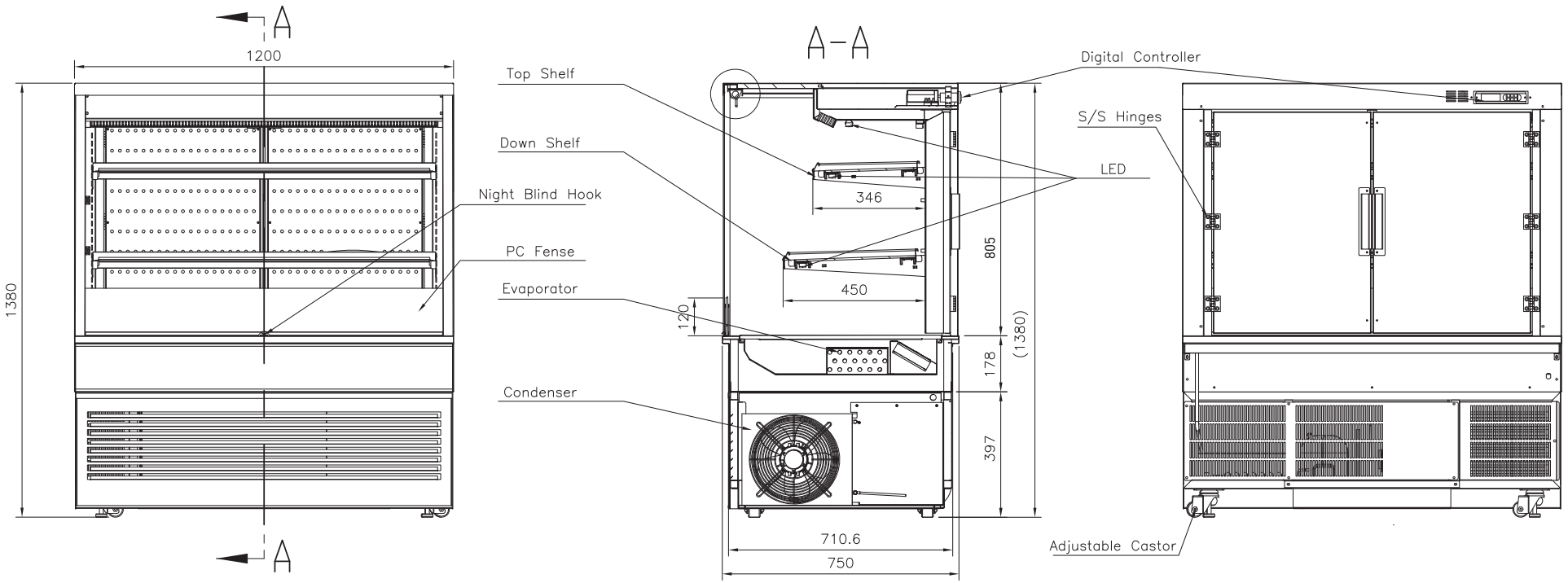

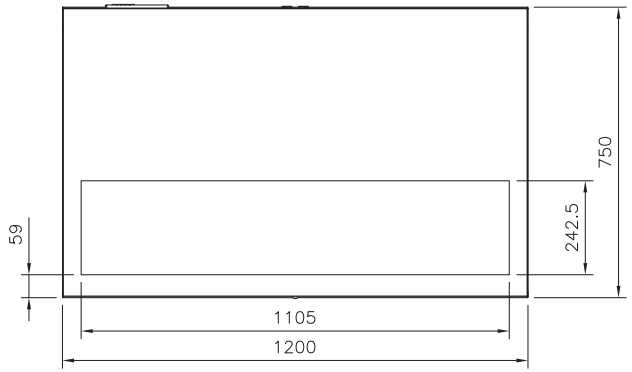

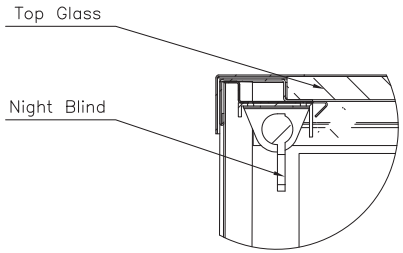

Download C.A.D models or contact us on COSSIGA.COM

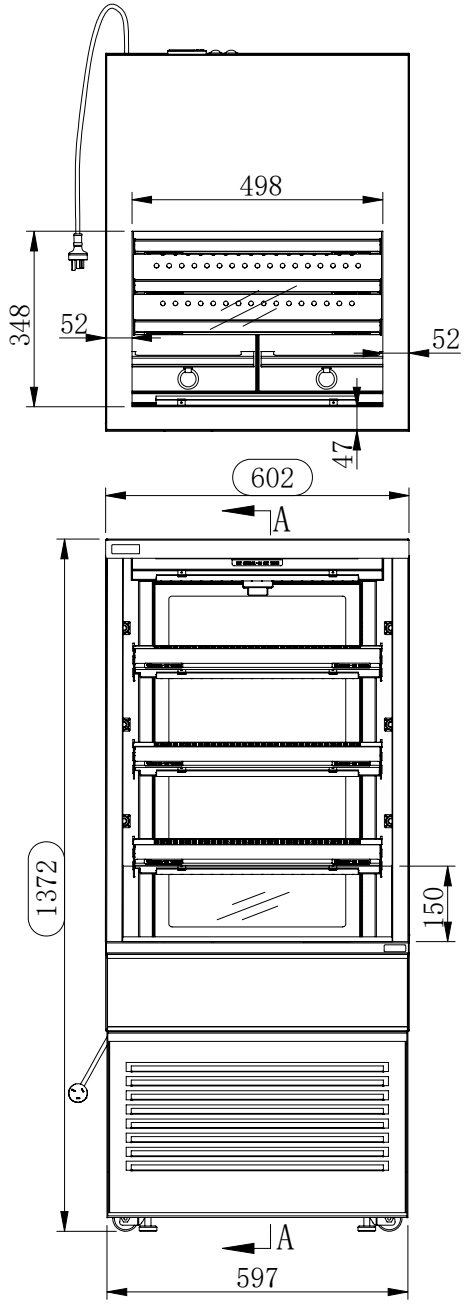

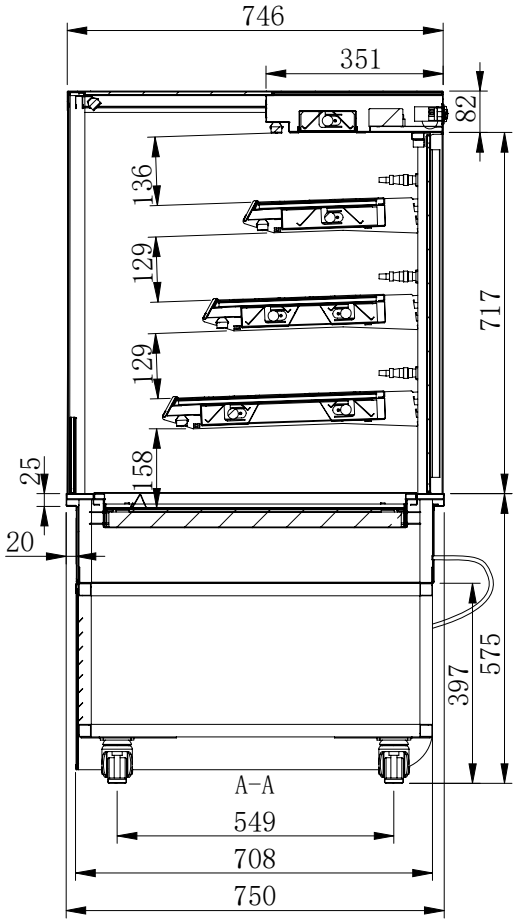

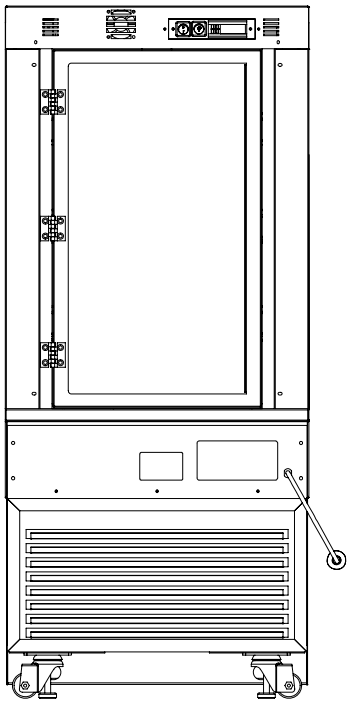

Download C.A.D models or contact us on COSSIGA.COM

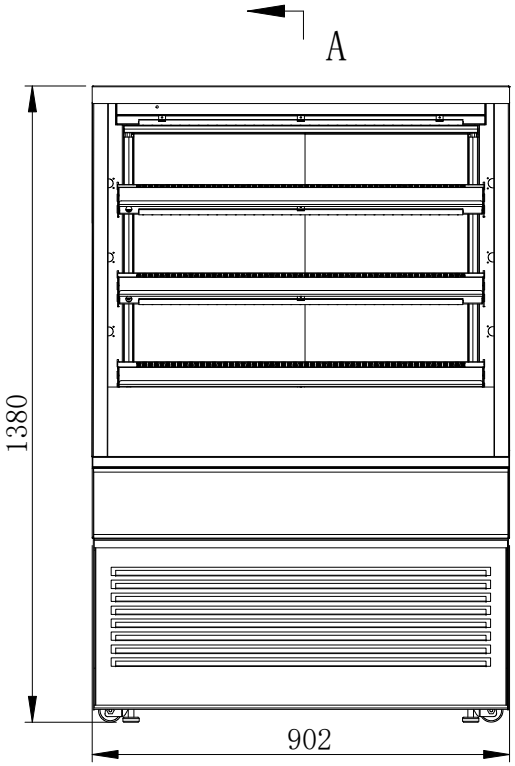

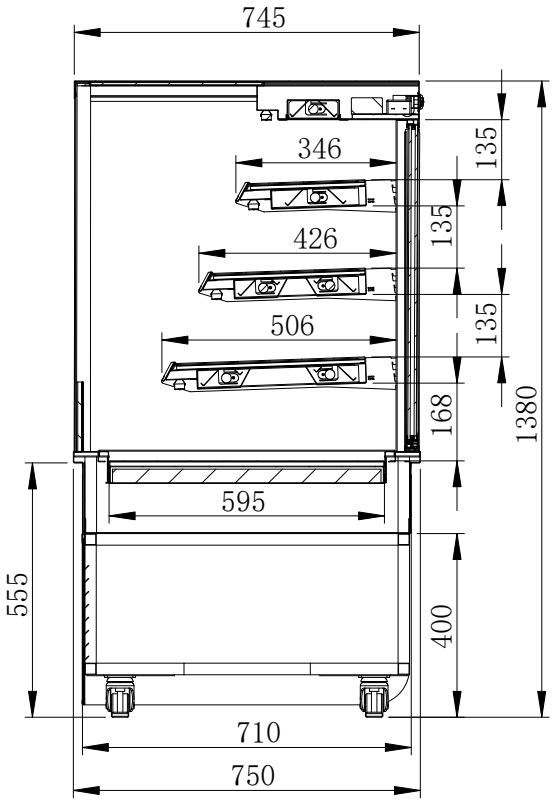

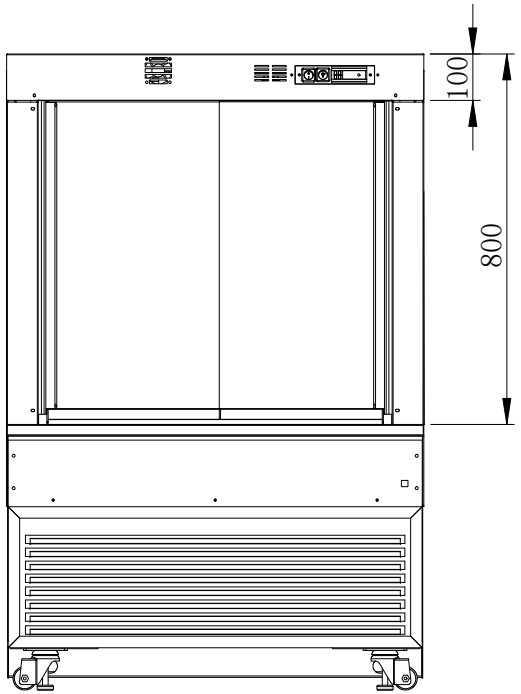

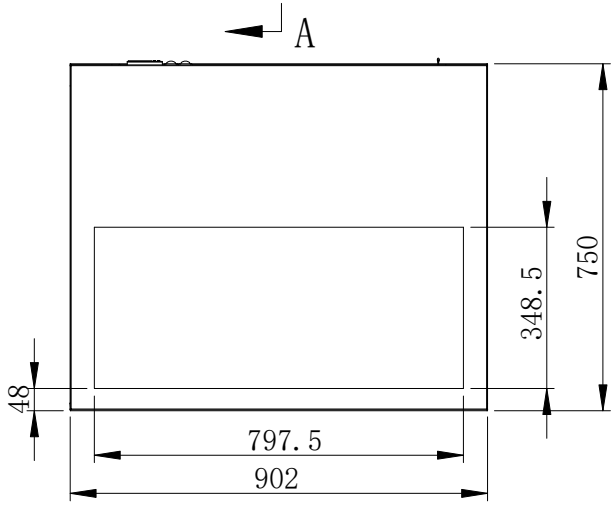

Download C.A.D models or contact us on COSSIGA.COM

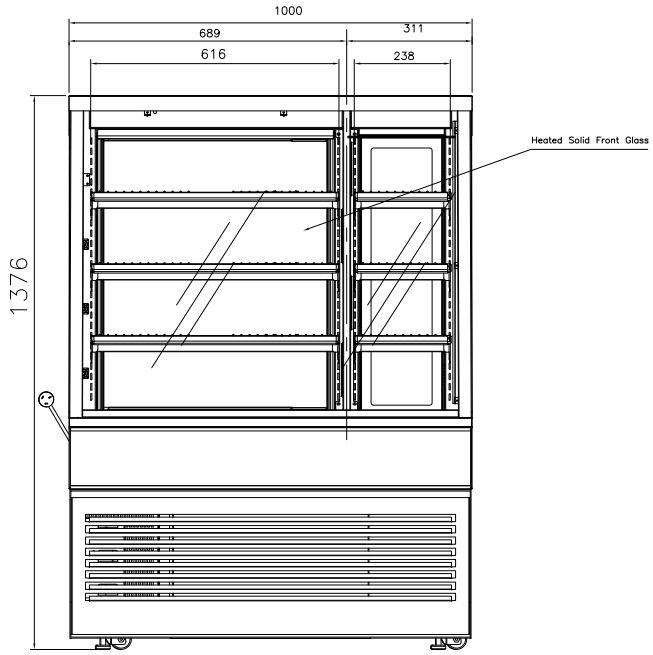

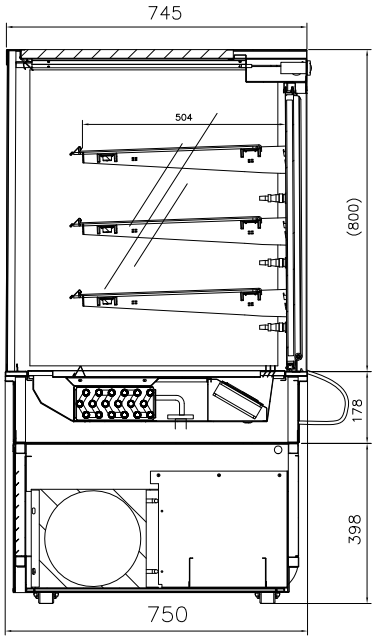

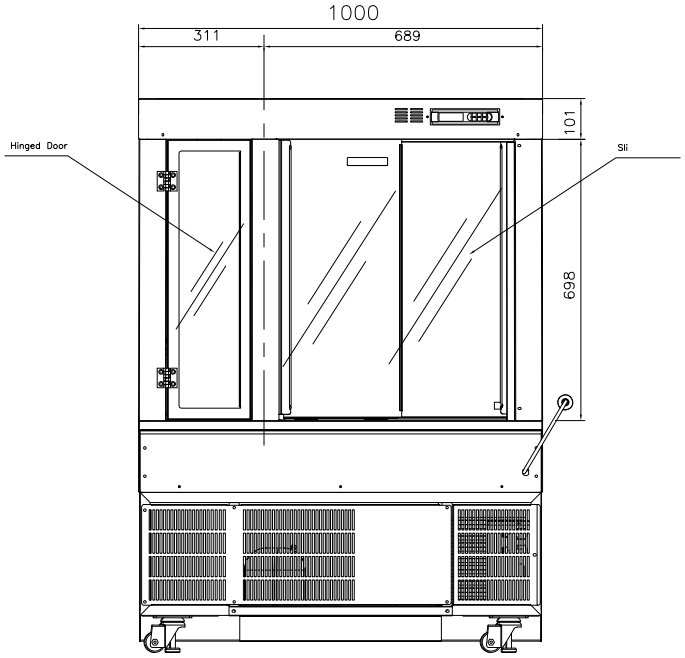

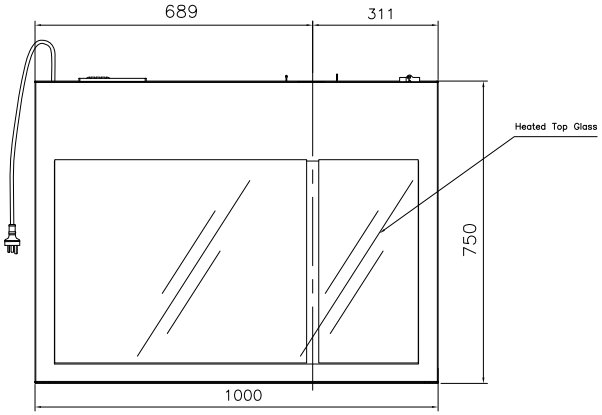

Download C.A.D models or contact us on COSSIGA.COM

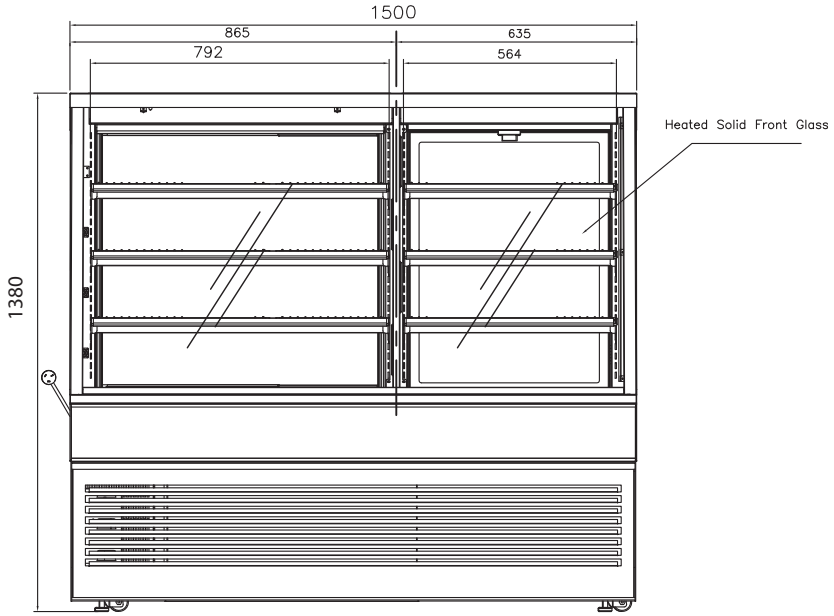

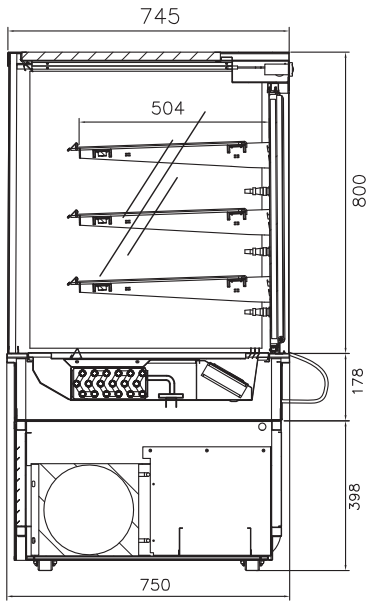

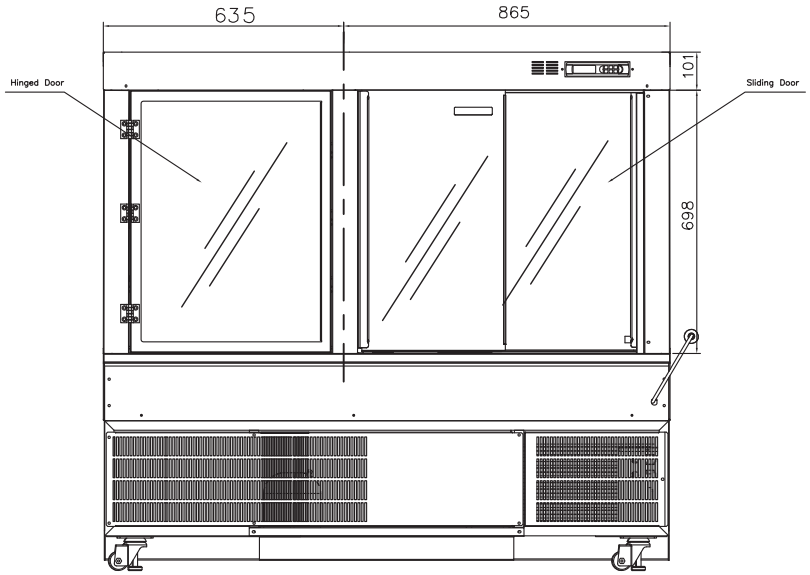

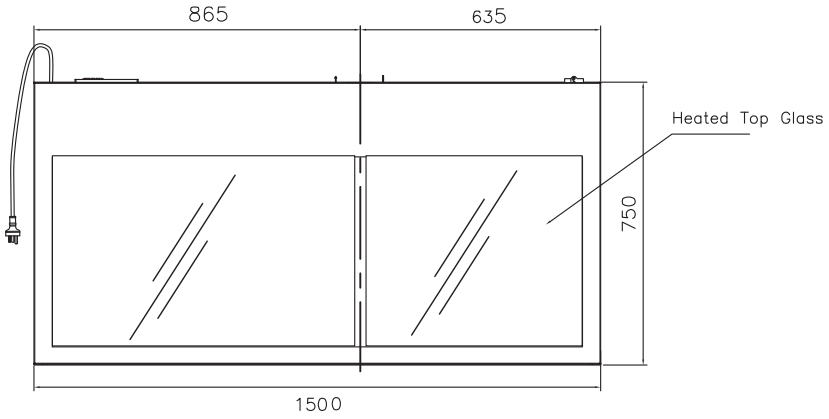

Download C.A.D models or contact us on COSSIGA.COM

To Waste

The condensate waste pipe may be plumbed directly to the building drainage system

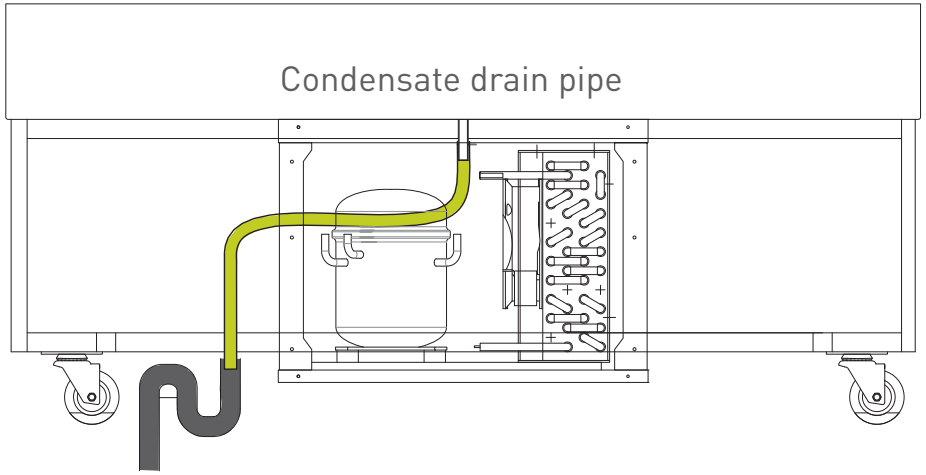

To Waste Water Drain

Exhaust air extract internally ducted trough left rear to enviroment

Rear Ventilation

Rear intake and extract ventilation system
Side mounted compressor

Front can be fully covered with custom panel joinery to suit environment

Ambient air intake through right rear internally ducted through condenser face

Separation To Wall

A separation gap of 150mm must be allow to provide adequate ventilation if unit is being placed hard up against a wall

BTG OPTIONAL FRONT VENTING

cossiga

Standard Configuration as shipped

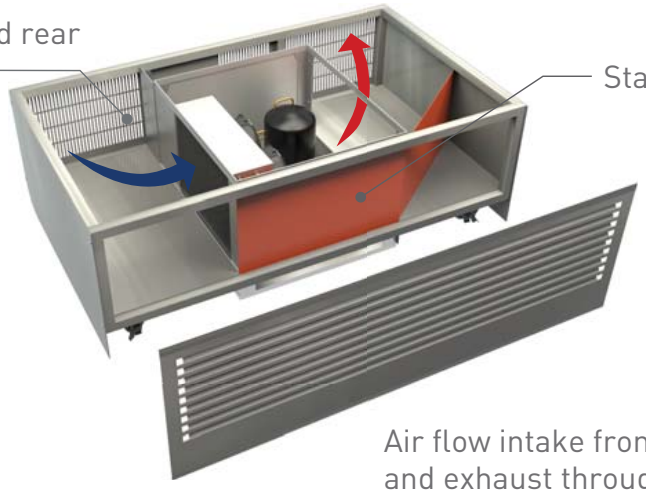

Optional Configuration - Front to Front

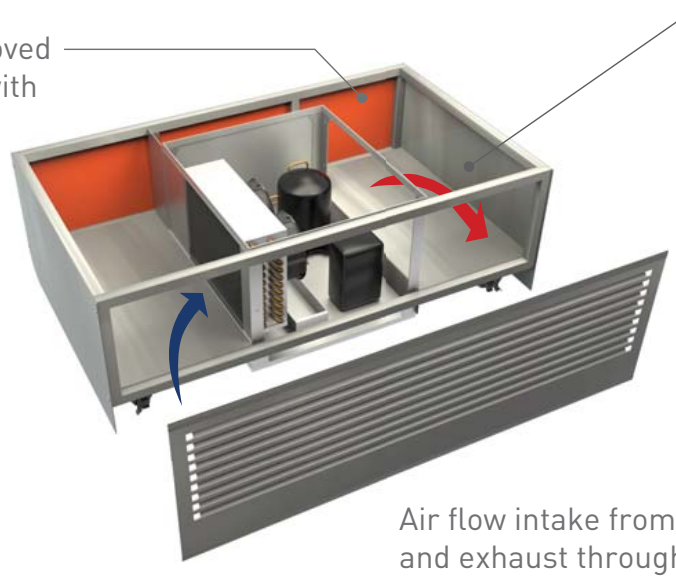

Back to back with front venting

Against a wall with front venting

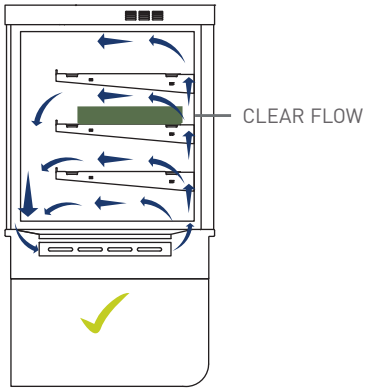

CORRECT AIR FLOW

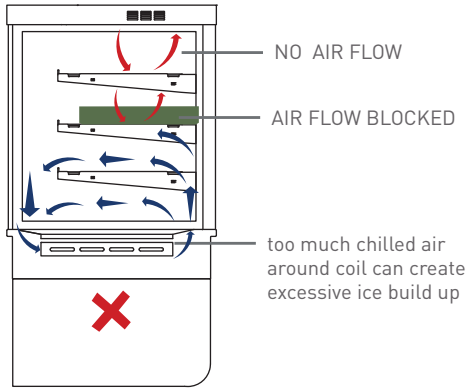

INCORRECT AIR FLOW

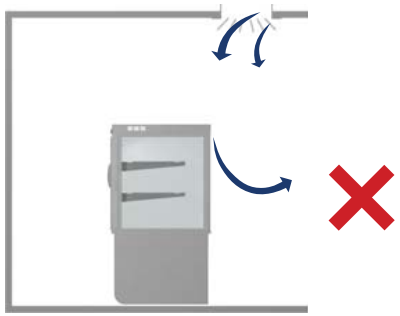

Mechanical air flows, such as diffusers and fans can disturb the air curtain on open fronted units causing failure

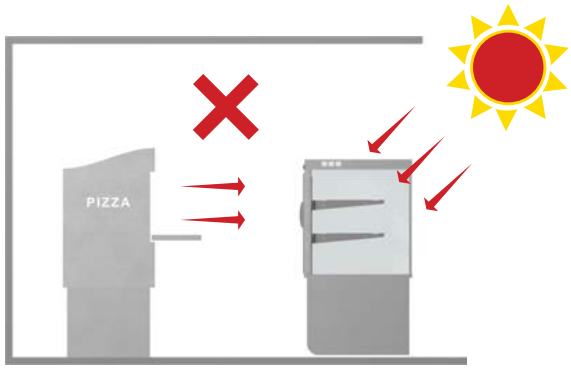

Heat from other equipment and natural conditions, such as direct sunlight straight on units, can cause cooling to fail and overload compressor

Blocked air flow will retard operation on both HOT and COLD units

Ensure trays or plates are not blocking air flow at rear

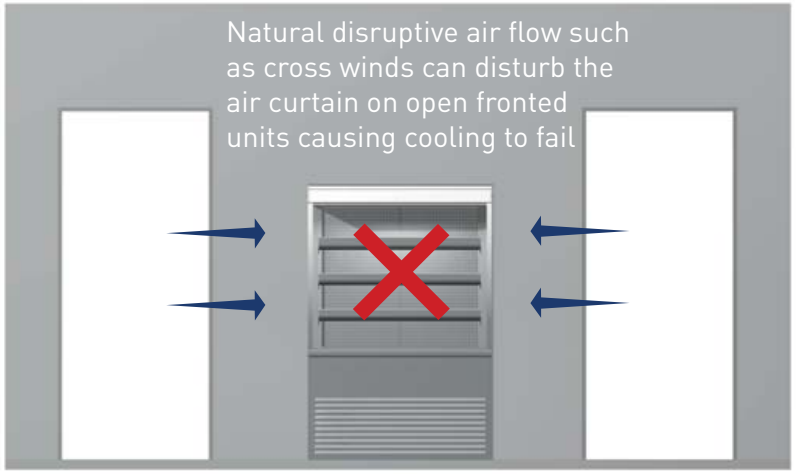

Locations to avoid :

- Close to shop front exterior
- In an outsdie location
- In direct sunlight
- In a high wind
- Near any source producing excessive heat
- Service units more frequently in dusty or polluted areas

Parts removed

Castors, front and side panels removed. Rear panels / grill remain for personnel safety.

Dropped Into Benchtop

Unit is dropped in to hole cut in bench top and supported by font and rear flange of unit.

MODEL	CUT OUT SIZE
BTG6	615 X 720
BTG9	915 X 720
BTG12	1215 X 720
BTG15	1515 X 720

Placed Into Benchtop from rear

Unit is slid into custom built frame from rear and supported by the sides of the unit base frame. L shaped supports shown in red in this example.

COPS CLIP ON PANEL SYSTEM

cossiga

Easy install option to eliminate a nib wall
Simply roll in and clip on

Clip on panels offered in 16 mm MDF
Melteca finish in two colour options
with a gloss or matt finish
600/900/1200/100 lengths options with end panels

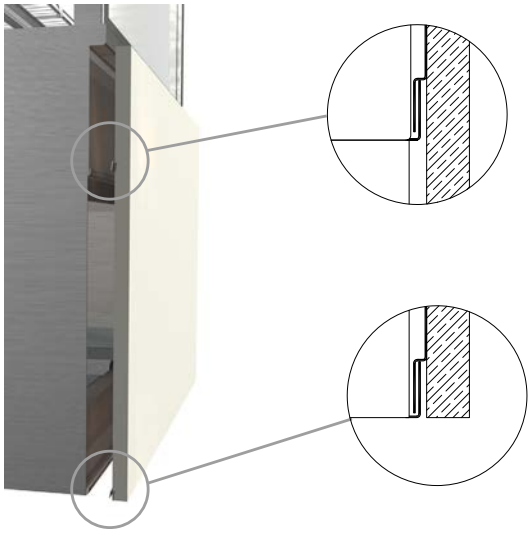

Black
Gloss or Matt

White
Gloss or Matt

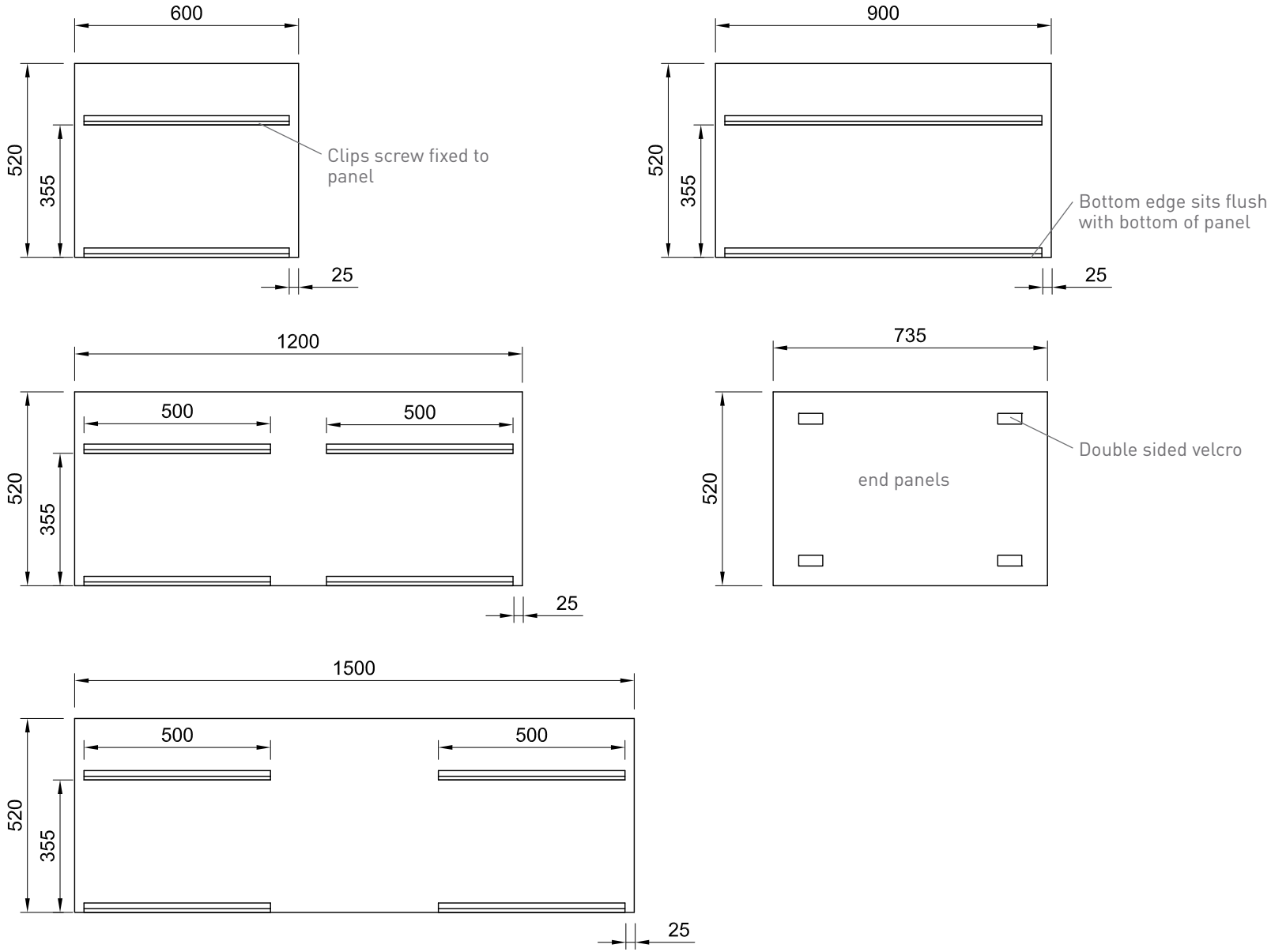

Integrated Clip System - Bracket fixing to joinery panels

SELF SERVICE SYSTEM

Each unit is self contained
Roll-in - Roll-out
Install in minutes
No on site joinery work required
Ease of cleaning and servicing
Mobile and flexible
Easy to upgrade front panel design
Custom branding strip
Rear service or against wall
All parts as optional component kits
Ideal solution for temporary events

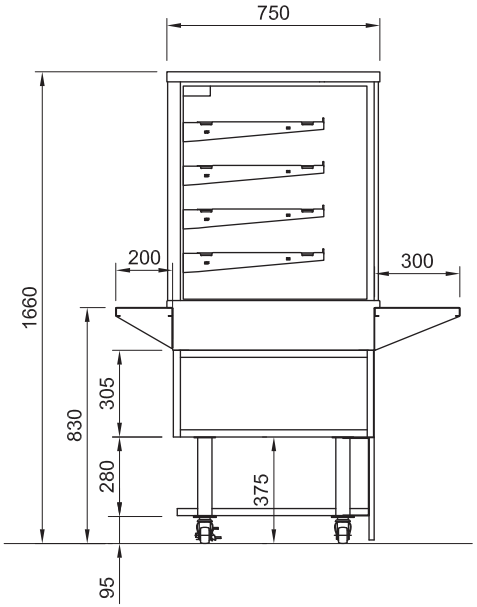

Optional bottom shelf kit for chilled units
Ensure chilled units are kept well ventilated

Vent required through front panel

Optional bottom meltica shelf kit - BY OTHERS

Optional rear loading shelf kit 200mm deep

Optional bottom meltica shelf kit - BY OTHERS

Download C.A.D models or contact us on COSSIGA.COM

Top Mounted Controller Panel

For against wall installations
Sold individually

Base Tray - Heated Units

Stainless Steel
For heated units
Sold in pairs

Price Tabs

Stainless Steel
Write on with marker or adhesive tape
Measure 60mm x 30mm
Sold in packs of 20

Tong Holder

Stainless Steel
Drop into counter tray race
Sold individually

Bag Holder

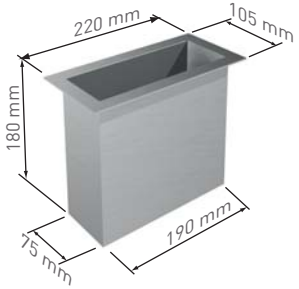

Front and Rear Work Shelves

Stainless Steel
Sold individually

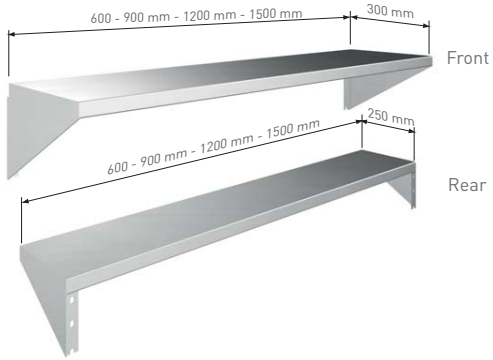

Castor Extension Kit

Increases cabinet height to 1660mm

Set of four, uses existing castors, includes fixing bolts and washers

Humidity Dish

Stainless Steel
Perforated lid is removable

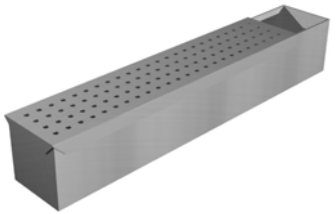

Download C.A.D models or contact us on COSSIGA.COM

TICKET STRIP

cossiga

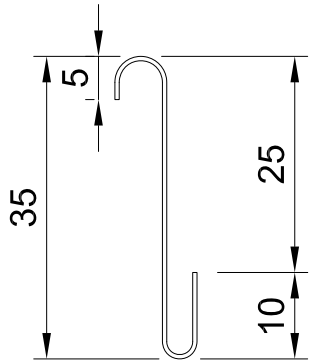

End Profile

Ticket Strip

Stainless Steel
Fits over front of shelves

Lengths

CABINET LENGTH MM	TICKET STRIP LENGTH
600	475
900	775
1200	1075
1500	1375
1800	810 X 2

Price Tabs

Stainless Steel
Write on with marker or adhesive tape
Measure 60mm x 30mm
Sold in packs of 20

OR Units - Rear door locking plate

For against wall or back to back installations used to prevent rear hinged doors from being opened.

Rear door handles are removed and discarded and plate is screwed in place.

OR OH Units - Unit Spacer

For OH and OR units. Provides a 100mm space between open fronted heated and chilled units to prevent the transfer of hot and cold air which can reduce proformance.

Attached to the bottom side of one unit using exisitng screws on side panel. screws are removed and spacer is screwed in place.

Merchandise Tray

Clip on stainless steel tray for all free standing units

- Attached to front of unit
- Built in ticket strip
- Angled base for maximum display

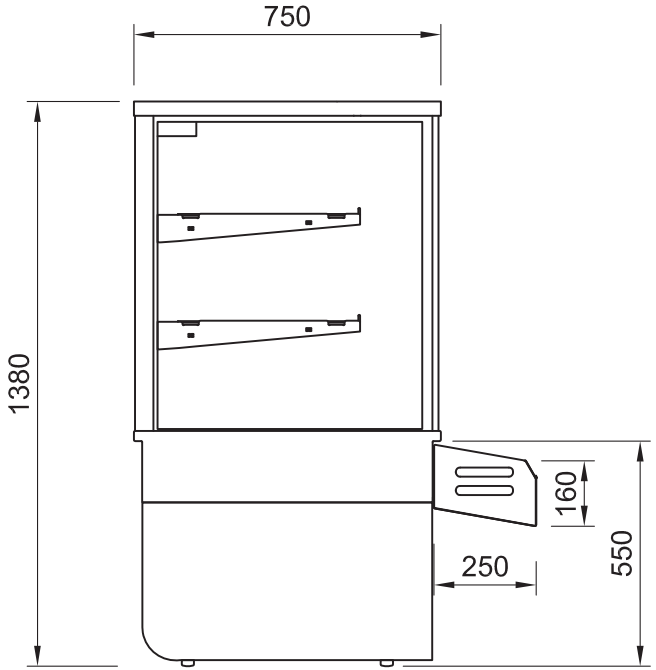

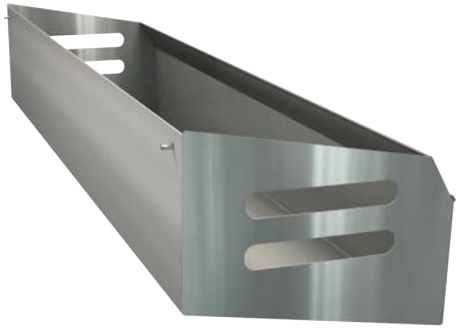

Download C.A.D models or contact us on COSSIGA.COM

CHARCUTERIE RACK

cossiga

Weight to be spread evenly over front, middle and rear rods

Charcuterie Rack

Stainless steel heavy duty shelf brackets
3 x 20 dia Stanless steel tubes

- Replaces existing shelves to allow hanging of cured meats, cheeses etc.
- Available in 900 and 1200 lengths only
- Maximum of 50kgs
- Hooks not included

Blocks work areas behind units

Mirror film adhered to inside of rear door glass

Mirror film adhered to inside of rear door glass

Add depth to your displays

FREE STANDING UNITS

- Applied to the inside glass rear doors
- Suitable for heated and chilled units

BENCHTOP UNITS

Glass Shelf Options

Standard wire racks are removed and replaced with 6mm toughened glass panes

Stainless Steel glass shelf support bracket

Maximum shelf load weight 15kg spread evenly

MODEL	GLASS	WIDTH MM	DEPTH MM	PER SHELF PANES	SHELVES	TOTAL PANES
BTGRF6	6MM TOUGHENED - POLISHED EDGES	240	430	2	3	6
BTGRF9	6MM TOUGHENED - POLISHED EDGES	390	430	2	3	6
BTGRF12	6MM TOUGHENED - POLISHED EDGES	540	430	2	3	6
BTGRF15	6MM TOUGHENED - POLISHED EDGES	690	430	2	3	8
BTGHT6	6MM TOUGHENED - POLISHED EDGES	240	430	2	4	8
BTGHT9	6MM T(OUGHENED - POLISHED EDGES	390	430	2	4	8
BTGHT12	6MM TOUGHENED - POLISHED EDGES	540	430	2	4	8
BTGHT15	6MM TOUGHENED - POLISHED EDGES	690	430	2	4	8

Pie Trays

Stainless Steel Construction

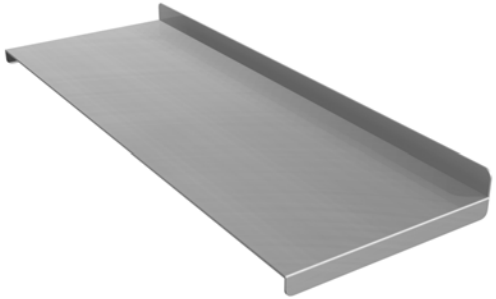

PIE TRAYS					
MODEL	NO. OF SHELF TRAYS	WIDTH MM	DEPTH MM	PER SHELF	TOTAL
BTGHT6	4 PER SHELF	120	445	4	16
BTGHT9	6 PER SHELF	130	445	6	24
BTGHT12	9 PER SHELF	120	445	9	36

1 Rack 1x 1/1 pan

One rack with full size pan

1 Rack 2 x 1/2 pan

One rack 2 x half pans

1 Rack 5 x 1/9 pans 3 x 16 pans

One rack varrious size pans with divider

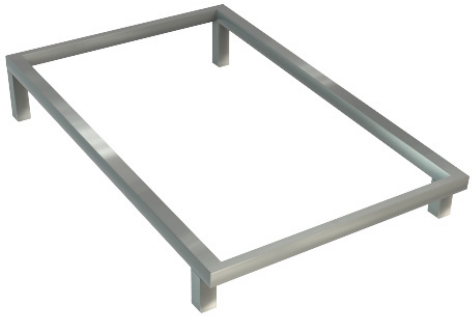

1 Rack

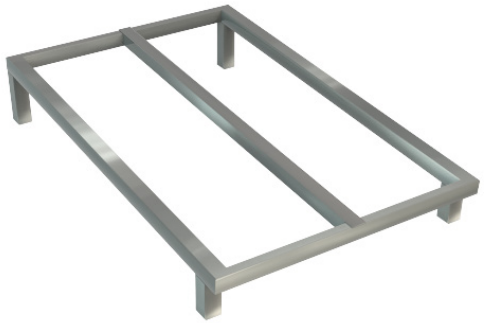

1 Rack

One rack with drop in divider

GASTRONORM PAN SYSTEM		
MODEL	PAN DEPTH	RACKS NO.
BTG 6	65MM	1X 1/1
BTG 9	65MM	2 X 1/1
BTG 12	65MM	3 X 1/1
BTG 15	65MM	4 X 1/1

Download C.A.D models or contact us on COSSIGA.COM

COLOUR WRAP OPTIONS

cossiga

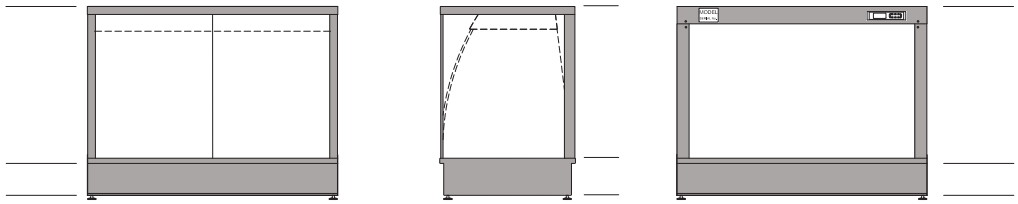

COUNTER TOP MODEL - CURVED OR SQUARE

all exterior visible areas covered

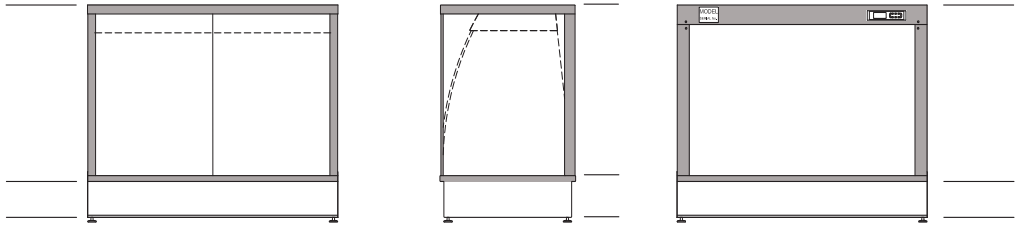

DROP IN COUNTER TOP MODEL - CURVED OR SQUARE

all exterior top visible areas covered

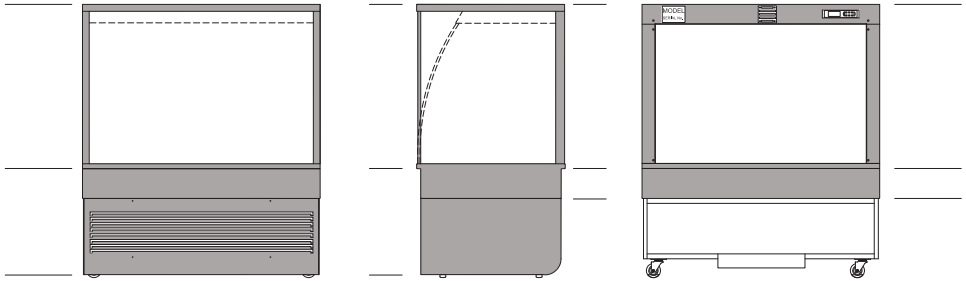

FREE STANDING - CURVED OR SQUARE

all exterior visible areas covered

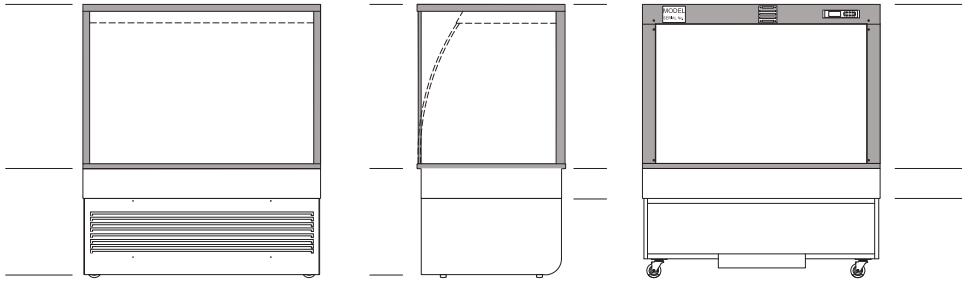

FREE STANDING BEHIND NIB WALL - CURVED OR SQUARE

all exterior top visible areas covered

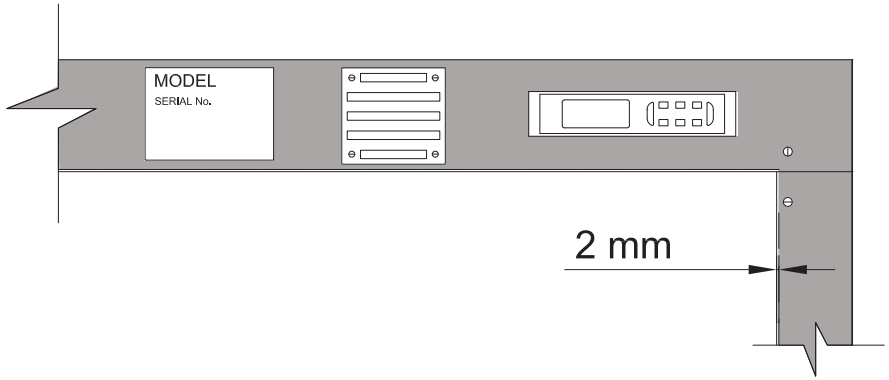

WRAP TRIMMINIG

2mm gap left around rear frame

Rear of units cut around serial number plate, exhaust fan and controller